BALDOR
A MEMBER OF THE ABB GROUP

BALDOR • RELIANCE

Product Information Packet

VEM3611

3HP,1760RPM,3PH,60HZ,184C,3631M,TEFC,F1

Copyright © All product information within this document is subject to Baldor Electric Company copyright © protection, unless otherwise noted.

Part Detail

Revision:	G	**Status:**	PRD/A	**Change #:**		**Proprietary:**	No
Type:	AC	**Prod. Type:**	3632M	**Elec. Spec:**	36WGS266	**CD Diagram:**	CD0005
Enclosure:	TEFC	**Mfg Plant:**		**Mech. Spec:**	36A013	**Layout:**	36LYA013
Frame:	184C	**Mounting:**	F1	**Poles:**	04	**Created Date:**	02-27-2015
Base:	N	**Rotation:**	R	**Insulation:**	F	**Eff. Date:**	06-02-2016
Leads:	9#16					**Replaced By:**	
Literature:		**Elec. Diagram:**					

BALDOR A MEMBER OF THE ABB GROUP

Nameplate NP1259L

CAT.NO.	VEM3611								
SPEC.	36A013S266G3								
HP	3								
VOLTS	230/460								
AMP	8.4/4.2								
RPM	1760								
FRAME	184C		HZ	60				PH	3
SER.F.	1.15	CODE	K	DES	B	CL	F		
NEMA-NOM-EFF	89.5	PF	75						
RATING	40C AMB-CONT								
CC	010A			USABLE AT 208V	9				
DE	6206	ODE	6205						
ENCL	TEFC	SN							

BALDOR
A MEMBER OF THE ABB GROUP

Parts List

Part Number	Description	Quantity
SA294539	SA 36A013S266G3	1.000 EA
RA280618	RA 36A013S266G3	1.000 EA
36FN3000C01	EXFN, PLASTIC, 5.25 OD, .912 ID	1.000 EA
36CB3004	36 CB CASTING W/1.09 DIA LEAD HOLE @ 6:0	1.000 EA
36GS1000	GASKET-CONDUIT BOX, .06 THICK #SV-330 LE	1.000 EA
51XB1016A08	10-16X 1/2HXWSSLD SERTYB	2.000 EA
11XW1032G06	10-32 X .38, TAPTITE II, HEX WSHR SLTD U	1.000 EA
HW3001B01	BRASS CUP WASHER, FOR #8 SCREW	1.000 EA
36FE3104A01	FREP MACH ASSEMBLY FOR ROUTING	1.000 EA
HW4500A01	1641B(ALEMITE)400 UNIV, GREASE FITT	1.000 EA
HW5100A05	WVY WSHR F/205 & 304 BRGS	1.000 EA
36EP3303A03	STD PU ENDPLATE -ENCL- 206 BRG W/OUT T-S	1.000 EA
HW4500A01	1641B(ALEMITE)400 UNIV, GREASE FITT	1.000 EA
10XN2520A24	1/4-20X 1 1/2 HEX HD X	4.000 EA
HW1001A25	LOCKWASHER 1/4, ZINC PLT .493 OD, .255 I	4.000 EA
51XB1214A16	12-14X1.00 HXWSSLD SERTYB	1.000 EA
36FH4009A102	IEC FH GREASER PRIMED	1.000 EA
51XW1032A06	10-32 X .38, TAPTITE II, HEX WSHR SLTD S	3.000 EA
36CB4516	36 LIPPED CB LID	1.000 EA
37GS1001	GASKET, CONDUIT BOX LID, .06 THICK LEXID	1.000 EA
51XW0832A07	8-32 X .44, TAPTITE II, HEX WSHR SLTD SE	4.000 EA
HW2501D13	KEY, 3/16 SQ X 1.375	1.000 EA
HA7000A01	KEY RETAINER 7/8" DIA SHAFT	1.000 EA
85XU0407S04	4X1/4 U DRIVE PIN STAINLESS	2.000 EA

BALDOR
A MEMBER OF THE ABB GROUP

Parts List (continued)

Part Number	Description	Quantity
MJ1000A02	GREASE, POLYREX EM EXXON (USe 4824-15A)	0.050 LB
MG1000Y03	MUNSELL 2.53Y 6.70/ 4.60, GLOSS 20,	0.022 GA
HA3101A25	THRUBOLT 1/4-20 X 11.000 OHIO ROD	4.000 EA
LC0005E01	CONN.DIA./WARNING LABEL (LC0005/LB1119N)	1.000 EA
NP1259L	ALUM SUPER-E UL CSA-EEV CC NEMA PREMIUM	1.000 EA
36PA1001	PKG GRP, PRINT PK1017A06	1.000 EA
PK3082	STYROFOAM CRADLE	1.000 EA
MN416A01	TAG-INSTAL-MAINT no wire (1200/bx) 11/14	1.000 EA

BALDOR
A MEMBER OF THE ABB GROUP

AC Induction Motor Performance Data

Record # 53364 - Typical performance - not guaranteed values

Winding: 36WGS266-R006	**Type:** 3632M	**Enclosure:** TEFC

Nameplate Data				460 V, 60 Hz: High Voltage Connection	
Rated Output (HP)	3			Full Load Torque	8.8 LB-FT
Volts	230/460			Start Configuration	direct on line
Full Load Amps	8.4/4.2			Breakdown Torque	37.6 LB-FT
R.P.M.	1760			Pull-up Torque	15.2 LB-FT
Hz	60	Phase	3	Locked-rotor Torque	21.7 LB-FT
NEMA Design Code	B	KVA Code	K	Starting Current	32.7 A
Service Factor (S.F.)	1.15			No-load Current	2.3 A
NEMA Nom. Eff.	89.5	Power Factor	75	Line-line Res. @ 25ºC	3.81 Ω
Rating - Duty	40C AMB-CONT			Temp. Rise @ Rated Load	44°C
S.F. Amps				Temp. Rise @ S.F. Load	52°C
				Locked-rotor Power Factor	42.2
				Rotor inertia	0.298 LB-FT2

Load Characteristics 460 V, 60 Hz, 3 HP

% of Rated Load	25	50	75	100	125	150	S.F.
Power Factor	35	55	68	75	80	82	77
Efficiency	81.1	87.8	89.6	89.8	89.7	88.2	89.2
Speed	1791	1783	1773	1764	1753	1741	1754
Line amperes	2.47	2.85	3.43	4.09	4.89	5.78	4.63

BALDOR A MEMBER OF THE ABB GROUP

Performance Graph at 460V, 60Hz, 3.0HP Typical performance - Not guaranteed values

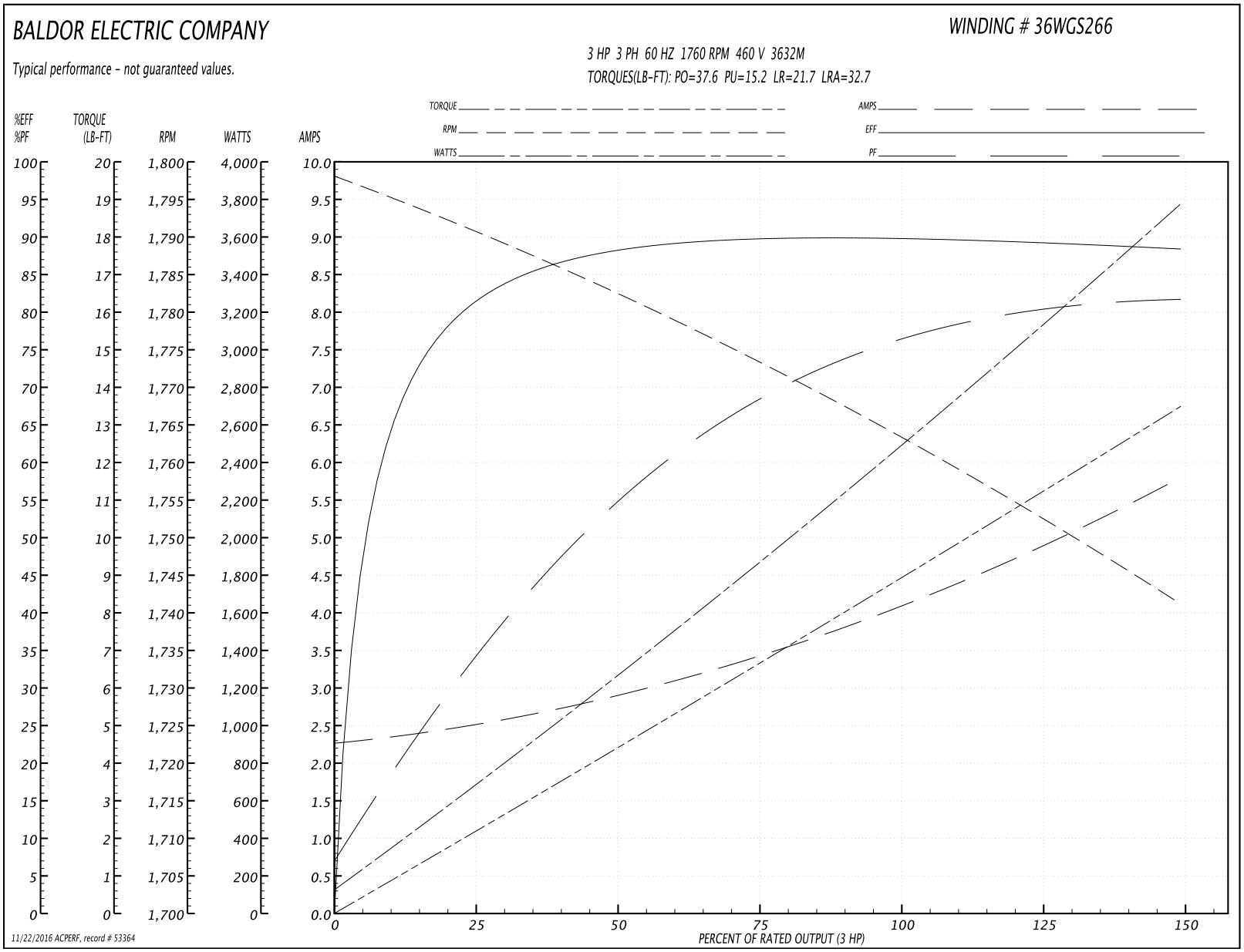

BALDOR A MEMBER OF THE ABB GROUP

AC Induction Motor Performance Data

Record # 57957 - Typical performance - not guaranteed values

Winding: 36WGS266-R006	**Type:** 3632M	**Enclosure:** TEFC

Nameplate Data				230 V, 60 Hz: Low Voltage Connection	
Rated Output (HP)	3			Full Load Torque	8.8 LB-FT
Volts	230/460			Start Configuration	direct on line
Full Load Amps	8.4/4.2			Breakdown Torque	37.6 LB-FT
R.P.M.	1760			Pull-up Torque	15.2 LB-FT
Hz	60	Phase	3	Locked-rotor Torque	21.7 LB-FT
NEMA Design Code	B	KVA Code	K	Starting Current	65.4 A
Service Factor (S.F.)	1.15			No-load Current	4.6 A
NEMA Nom. Eff.	89.5	Power Factor	75	Line-line Res. @ 25ºC	0.953 Ω
Rating - Duty	40C AMB-CONT			Temp. Rise @ Rated Load	44°C
S.F. Amps				Temp. Rise @ S.F. Load	52°C
				Locked-rotor Power Factor	42.2
				Rotor inertia	0.298 LB-FT2

Load Characteristics 230 V, 60 Hz, 3 HP

% of Rated Load	25	50	75	100	125	150	S.F.
Power Factor	35	55	68	75	80	82	78
Efficiency	81.1	87.8	89.6	89.8	89.7	88.2	89.7
Speed	1791	1783	1773	1764	1753	1741	1757
Line amperes	4.94	5.7	6.86	8.18	9.78	11.6	9.14

BALDOR A MEMBER OF THE ABB GROUP

Performance Graph at 230V, 60Hz, 3.0HP Typical performance - Not guaranteed values

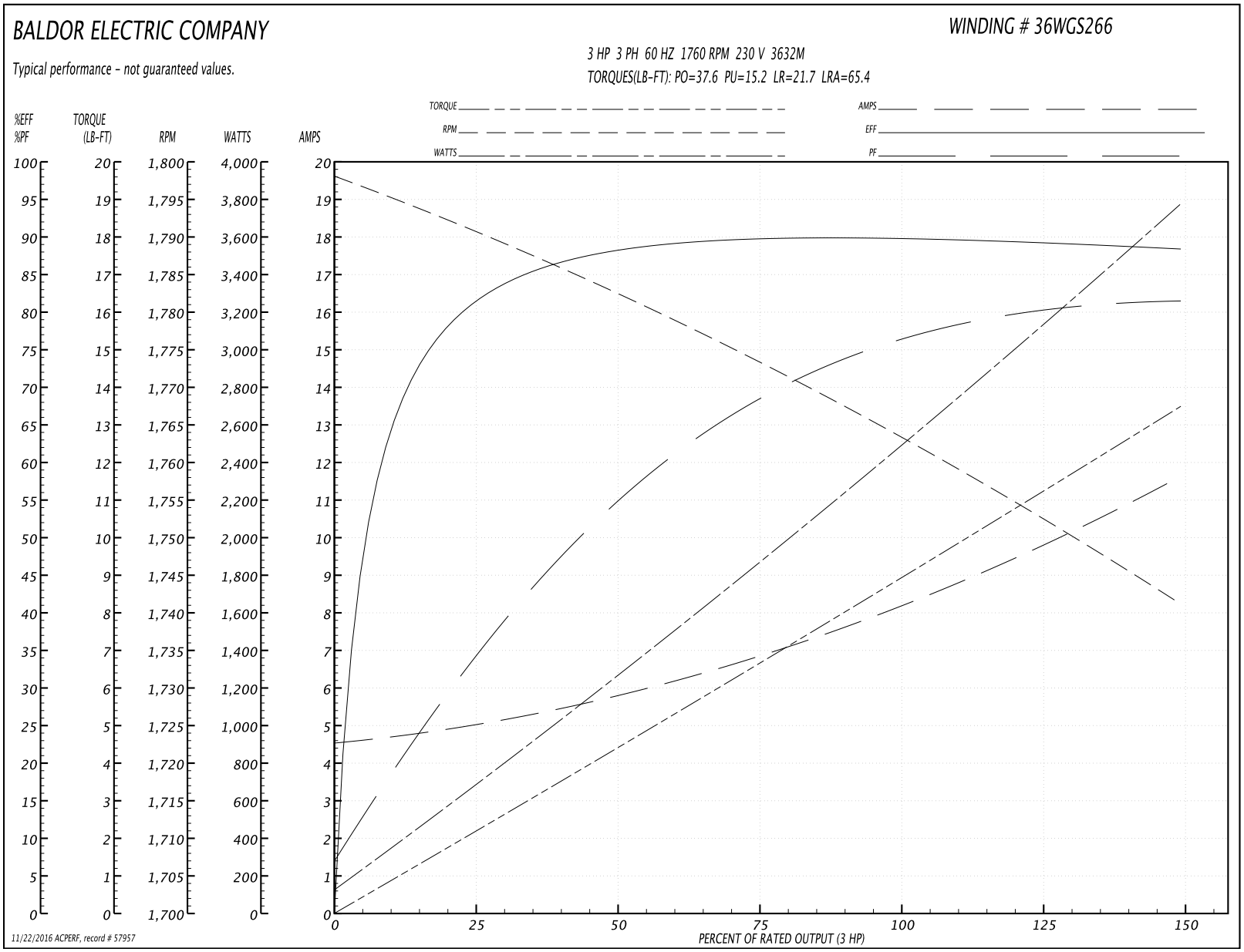

BALDOR A MEMBER OF THE ABB GROUP

36LYA013

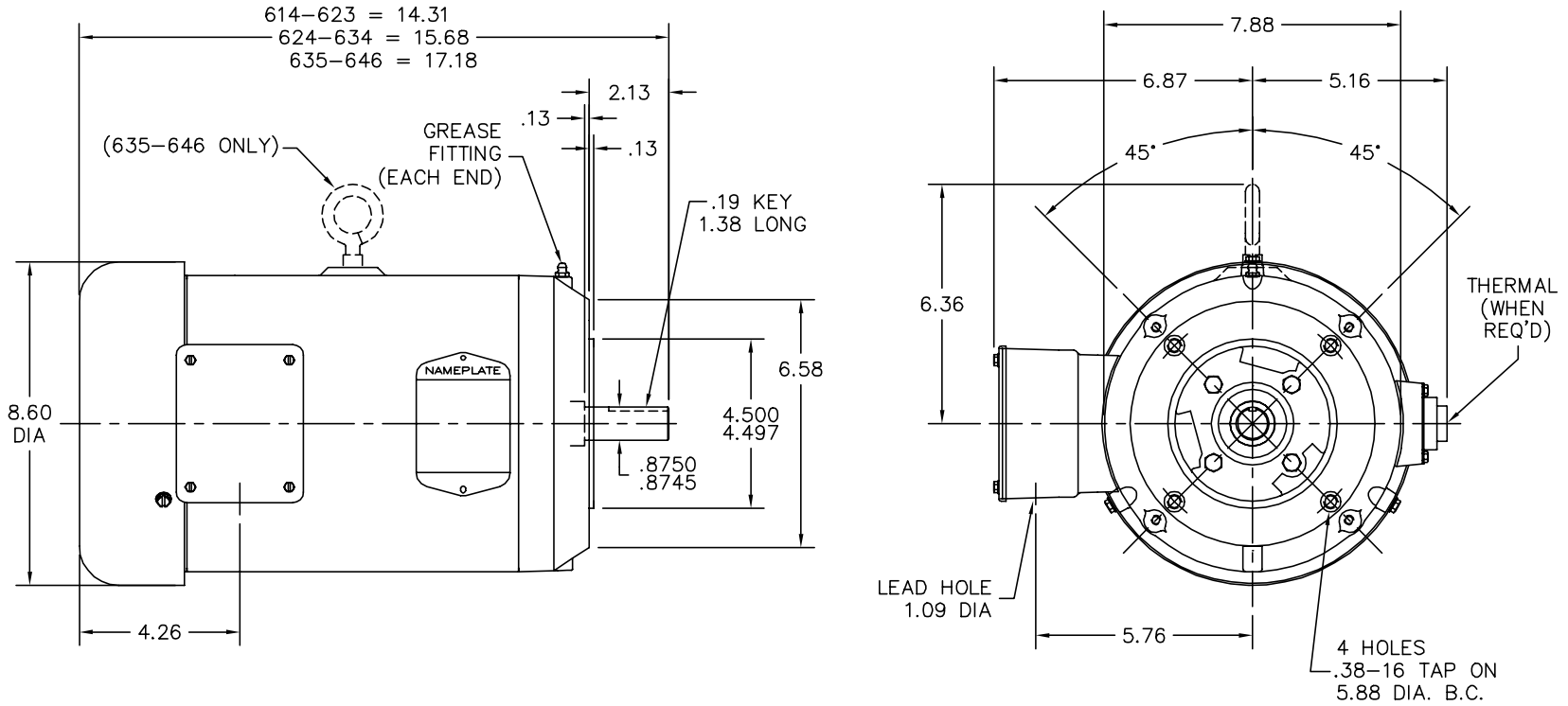

36LYA013

CUSTOMER IS RESPONSIBLE FOR DETERMINING THAT BALDOR'S PRODUCT WILL PERFORM SUITABLY IN THE INTENDED APPLICATION.

REV. DESC: UPDATE KOLD GRAPHICS & ADDED INTERNAL PARTS			BALDOR
REV. LTR: H	VERSION: 03	TDR: 000000844139	
FILE: \AAA\00003\208	REVISED: 11:07:03 03/17/2014	BY: ENBRAMO	STD VERT 182–4C TEFC 36M
MTL: –			SH 1 of 1

BALDOR A MEMBER OF THE ABB GROUP

CD0005

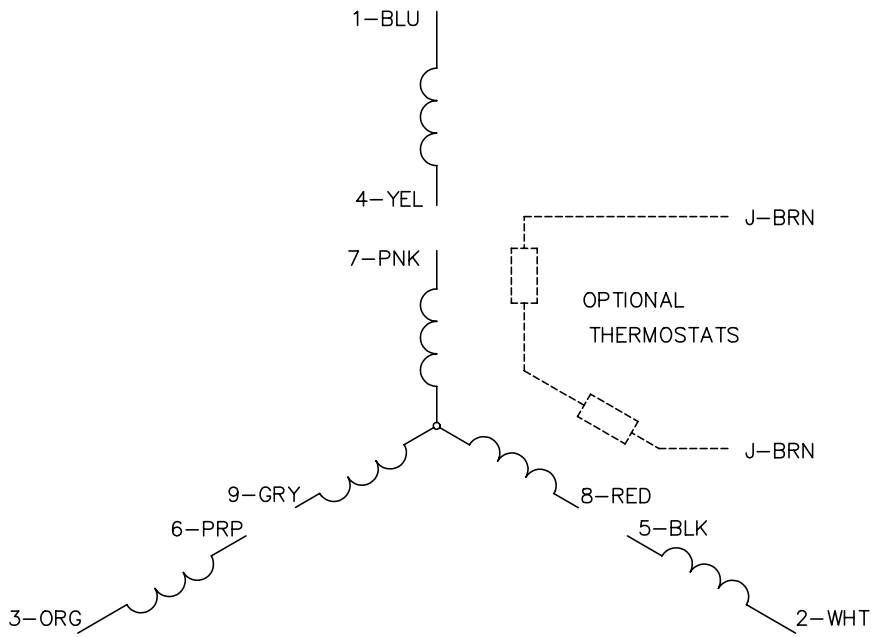

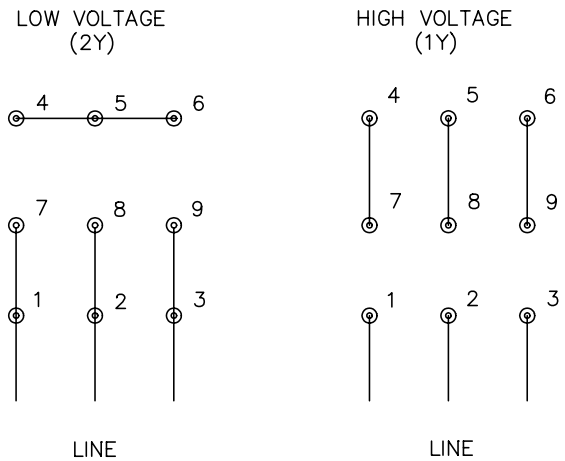

NOTES:

1. INTERCHANGE ANY TWO LINE LEADS TO REVERSE ROTATION.
2. OPTIONAL THERMOSTATS ARE PROVIDED WHEN SPECIFIED.
3. ACTUAL NUMBER OF INTERNAL PARALLEL CIRCUITS MAY BE A MULTIPLE OF THOSE SHOWN ABOVE.
4. LEAD COLORS ARE OPTIONAL. LEADS MUST ALWAYS BE NUMBERED AS SHOWN.

REV. DESC: REVISE TO SHOW OPTIONAL COLORS			
REV. LTR: E	BY: JLP	REVISED: 01/19/99 10:15	TDR: 0171435
CD0005		FILE: AAA00005140	MDL: –
		MTL: –	

BALDOR ELECTRIC Co.

3PH, DV, 9 LEADS

CD0005

BALDOR A MEMBER OF THE ABB GROUP