BALDOR
A MEMBER OF THE ABB GROUP

BALDOR • RELIANCE

Product Information Packet

ECP3584T-5

1.5HP,1760RPM,3PH,60HZ,145T,0530M,TEFC,F

Copyright © All product information within this document is subject to Baldor Electric Company copyright © protection, unless otherwise noted.

Part Detail

Revision:	R	**Status:**	PRD/A	**Change #:**		**Proprietary:**	No
Type:	AC	**Prod. Type:**	0530M	**Elec. Spec:**	05WGW830	**CD Diagram:**	CD0006
Enclosure:	TEFC	**Mfg Plant:**		**Mech. Spec:**	05F008	**Layout:**	05LYF008
Frame:	145T	**Mounting:**	F1	**Poles:**	04	**Created Date:**	12-01-2010
Base:	RG	**Rotation:**	R	**Insulation:**	F	**Eff. Date:**	06-16-2016
Leads:	3#18					**Replaced By:**	
Literature:		**Elec. Diagram:**					

BALDOR A MEMBER OF THE ABB GROUP

Nameplate NP3258E

CAT.NO.	ECP3584T-5						
SPEC.	05F008W830G1						
HP	1.5 TE						
VOLTS	575						
AMP	1.7						
RPM	1760						
FRAME	145T	HZ	60			PH	3
SER.F.	1.15	CODE	L	DES	B	CL	F
RATING	40C AMB-CONT						
SN							
DE	6205	ODE	6205				
NEMA-NOM-EFF	88.5	PF	76				
G.MIN.EFF	86.5	CC	010A				
T. CODE	T4	T=	135				

BALDOR
A MEMBER OF THE ABB GROUP

Nameplate NP3261E

SPEC.	05F008W830G1		
D.E. BRG.	25BC02XP30X		
O.D.E. BRG.	25BC02XP30X		
GREASE	POLYREX EM		
RPM MAX	2700	MAX. KVAR	0.47
BLANK			
INV.TYPE	PWM		
T=	135		
C HP FR	60	C HP TO	90
CT HZ FROM	1.3	CT HZ TO	60
VT HZ FROM	0-	VT HZ TO	60
HTR-VOLTS		HTR-AMPS	
HTR-WATTS		MAX. SPACE HEATER TEMP.	

BALDOR
A MEMBER OF THE ABB GROUP

Parts List

Part Number	Description	Quantity
SA213101	SA 05F008W830G1	1.000 EA
RA200327	RA 05F008W830G1	1.000 EA
34FN3002B01	EXTERNAL FAN, PLASTIC, .637/.639 HUB W/	1.000 EA
HW3201A05	3/8-16 EYEBOLT	1.000 EA
06CB1000A02G	CONDUIT BOX, MACH GRAY	1.000 EA
RM1016	LEAD SEPARATOR GASKET - 305/306 C.P.MOTO	1.000 EA
51XW2520A12	SCREW, HEX SER SLT HD, ZN, 1/4-20 X .75	2.000 EA
11XW1032G06	10-32 X .38, TAPTITE II, HEX WSHR SLTD U	1.000 EA
HW3001B01	BRASS CUP WASHER, FOR #8 SCREW	1.000 EA
10XN2520S06	1/4 20X3/8 HX HD CAP S.S.	2.000 EA
WD1000B16	T&B CX70TN TERMINAL	2.000 EA
35EP1102B03G	FREP TEFC 205 BRG,GRSR,RLF,.125 NPT DRAI	1.000 EA
HW4500A01	1641B(ALEMITE)400 UNIV, GREASE FITT	1.000 EA
HA4051A00	PLASTIC CAP FOR GREASE FITTING	1.000 EA
HW4500A17	317400 ALEMITE GREASE RELIEF	1.000 EA
HA4054	SHORT T-DRAIN FITTING, .125" N.P.T.	1.000 EA
HW5100A05	WVY WSHR F/205 & 304 BRGS	1.000 EA
35EP1102A67G	PUEP ENCL 205 BRG W/GRSR,RELF&.125 NPT D	1.000 EA
HW4500A01	1641B(ALEMITE)400 UNIV, GREASE FITT	1.000 EA
HA4051A00	PLASTIC CAP FOR GREASE FITTING	1.000 EA
HW4500A17	317400 ALEMITE GREASE RELIEF	1.000 EA
HA4054	SHORT T-DRAIN FITTING, .125" N.P.T.	1.000 EA
HA3100A37	THRUBOLT 10-32 X 8.500	4.000 EA
XY1032A02	10-32 HEX NUT DIRECTIONAL SERRATION	4.000 EA

BALDOR
A MEMBER OF THE ABB GROUP

Parts List (continued)

Part Number	Description	Quantity
51XB1214A16	12-14X1.00 HXWSSLD SERTYB	1.000 EA
35FH1000A01G	35FH1000A01 W/GRAY FLUIDIZ	1.000 EA
WD4100A03	DE-750 HEYCO PLUG 62MP0750 MICRO PLASTIC	1.000 EA
10XN2520A18	1/4-20 X 1-1/8 HEX CAP SCREW.	3.000 EA
HW1001A25	LOCKWASHER 1/4, ZINC PLT .493 OD, .255 I	3.000 EA
06CB1502A01G	LIPPED CONDUIT BOX LID, MACH GRAY EPOXY	1.000 EA
06GS1003	GASKET, KOBX LID, 1/8" THICK BLACK NEOPR	1.000 EA
10XN2520A12	O1/4-20X 3/4 HEX HEAD CAP	2.000 EA
HW1001A25	LOCKWASHER 1/4, ZINC PLT .493 OD, .255 I	2.000 EA
HW4600B32SP	V-RING SLINGER 1.000 X 1.540 X .24 VITON	1.000 EA
HA1005A03SP	SLINGER, OD 1.750, ID .938, 205 BRG	1.000 EA
HW2501D13	KEY, 3/16 SQ X 1.375	1.000 EA
HA7000A01	KEY RETAINER 7/8" DIA SHAFT	1.000 EA
MJ5001A27	32220KN GRAY SEALER *MIN BUY 4 QTS=1GAL	0.001 QT
85XU0407S04	4X1/4 U DRIVE PIN STAINLESS	2.000 EA
LB1002N	LABEL,MARINE DUTY (ON ROLLS)	1.000 EA
LB1115N	LABEL,LIFTING DEVICE (ON ROLLS)	1.000 EA
MJ1000A02	GREASE, POLYREX EM EXXON (USe 4824-15A)	0.050 LB
MG1025N19	WILKOFAST, 778.50, RELIANCE BLUE-GREEN	0.022 GA
LB1119N	WARNING LABEL	1.000 EA
LC0006	CONNECTION LABEL	1.000 EA
LB1449	DIV-2/NEC WARNING LABEL	1.000 EA
NP3258E	SS CP SUPER-E DIV-2 UL CSA-C US EEV CC	1.000 EA
NP3261E	SS CP SUPER-E AUX DATA INFORMATION	1.000 EA

BALDOR
A MEMBER OF THE ABB GROUP

85XU0407S04	4X1/4 U DRIVE PIN STAINLESS	2.000 EA
36PA1001	PKG GRP, PRINT PK1017A06	1.000 EA
MN416A01	TAG-INSTAL-MAINT no wire (1200/bx) 11/14	1.000 EA

Accessories

Part Number	Description	Multiplier
35-1300	C FACE KIT	A8

BALDOR
A MEMBER OF THE ABB GROUP

AC Induction Motor Performance Data

Record # 47113 - Typical performance - not guaranteed values

Winding: 05WGW830-R012	**Type:** 0530M	**Enclosure:** TEFC

Nameplate Data				575 V, 60 Hz: Single Voltage Motor	
Rated Output (HP)	1.5			Full Load Torque	4.5 LB-FT
Volts	575			Start Configuration	direct on line
Full Load Amps	1.7			Breakdown Torque	18.8 LB-FT
R.P.M.	1760			Pull-up Torque	10 LB-FT
Hz	60	Phase	3	Locked-rotor Torque	13.7 LB-FT
NEMA Design Code	B	KVA Code	L	Starting Current	14.3 A
Service Factor (S.F.)	1.15			No-load Current	0.962 A
NEMA Nom. Eff.	88.5	Power Factor	76	Line-line Res. @ 25ºC	15.3 Ω
Rating - Duty	40C AMB-CONT			Temp. Rise @ Rated Load	30°C
S.F. Amps				Temp. Rise @ S.F. Load	36°C
				Rotor inertia	0.177 LB-FT2

Load Characteristics 575 V, 60 Hz, 1.5 HP

% of Rated Load	25	50	75	100	125	150	S.F.
Power Factor	34	54	67	76	80	83	78
Efficiency	79.1	86.5	88.2	89	87.9	86.6	88.3
Speed	1791	1782	1773	1761	1751	1738	1755
Line amperes	1.03	1.19	1.41	1.68	1.99	2.33	1.87

BALDOR A MEMBER OF THE ABB GROUP

Performance Graph at 575V, 60Hz, 1.5HP Typical performance - Not guaranteed values

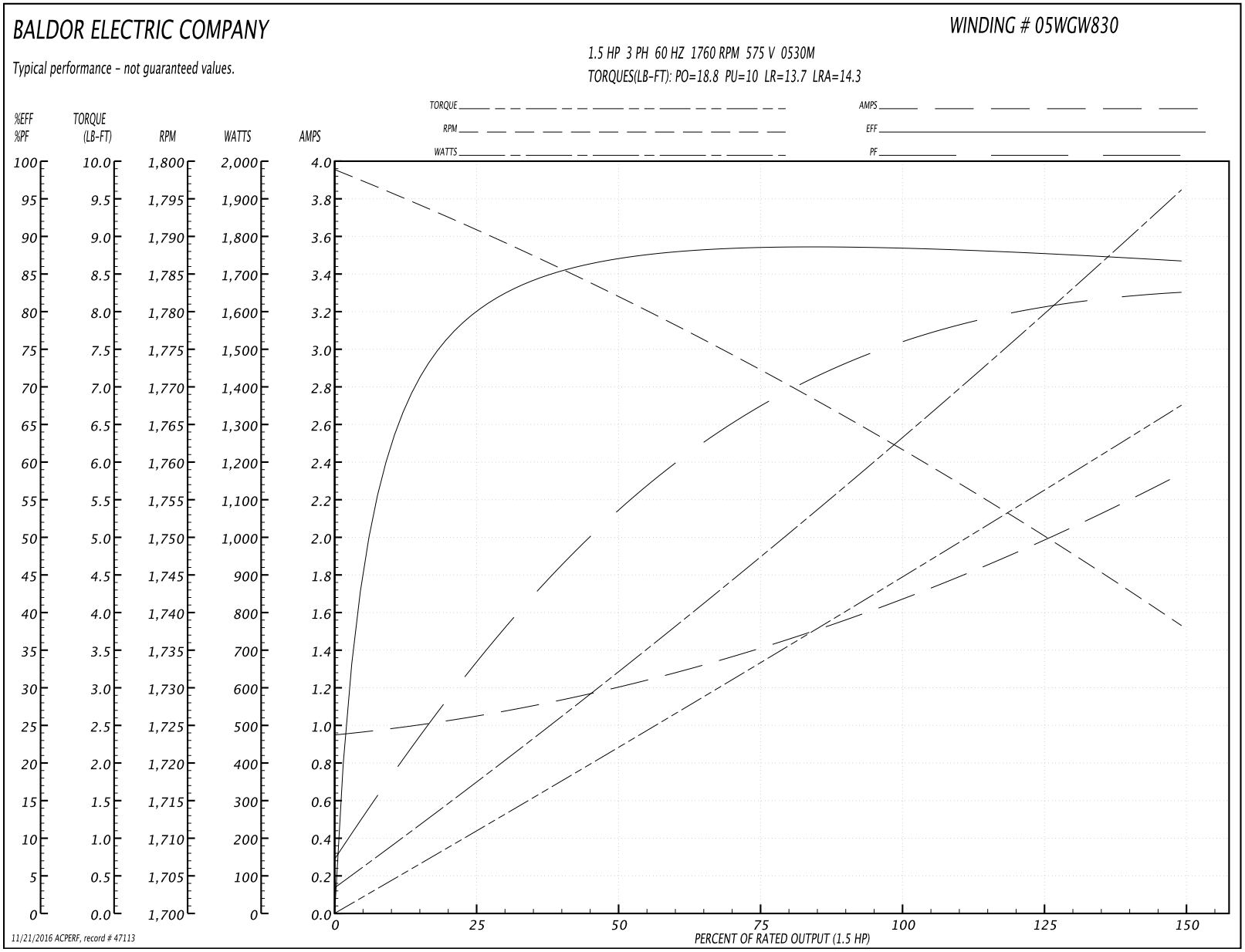

BALDOR A MEMBER OF THE ABB GROUP

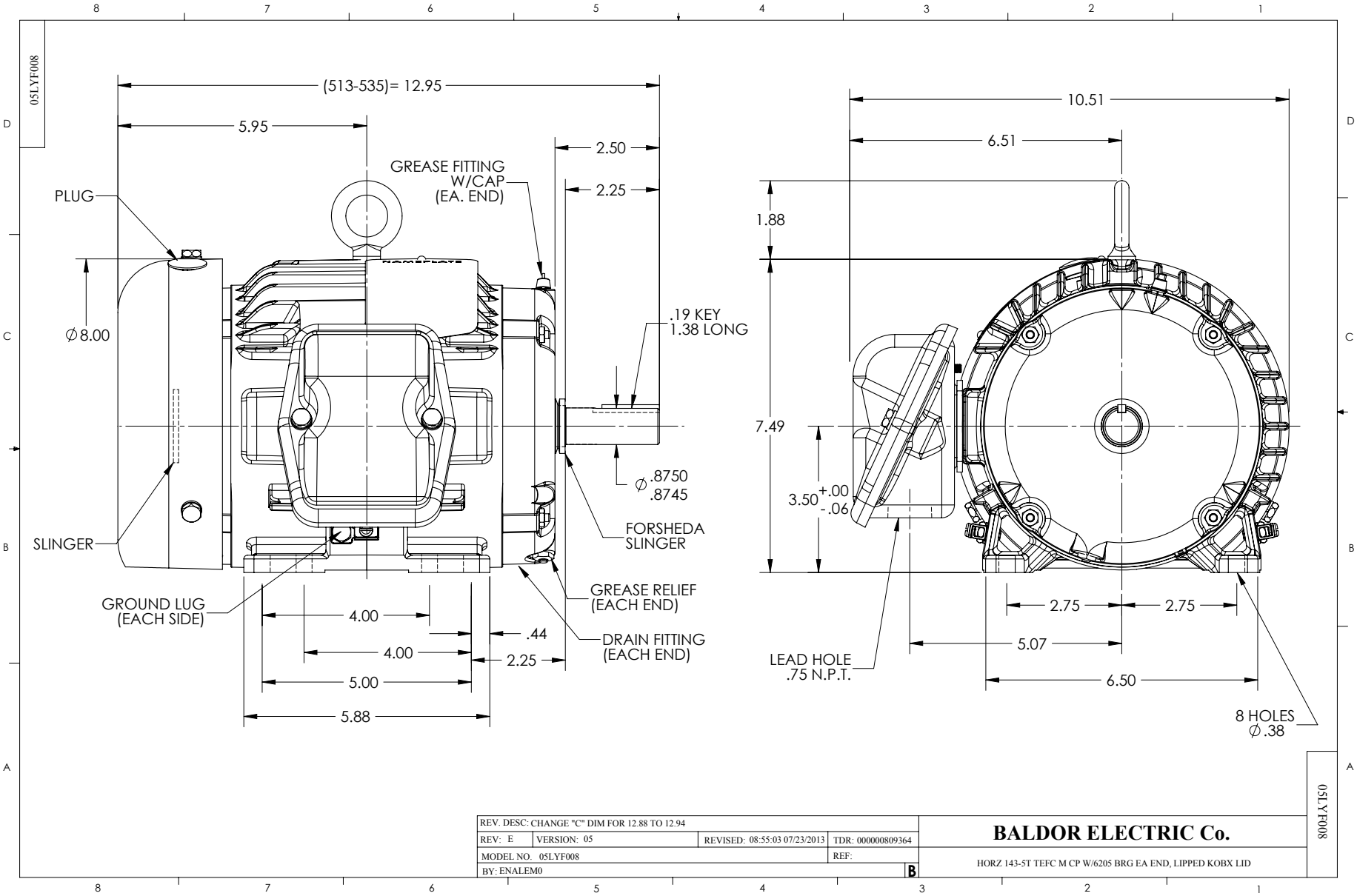

BALDOR A MEMBER OF THE ABB GROUP

CD0006

TYPICAL WYE–CONNECTED MOTOR

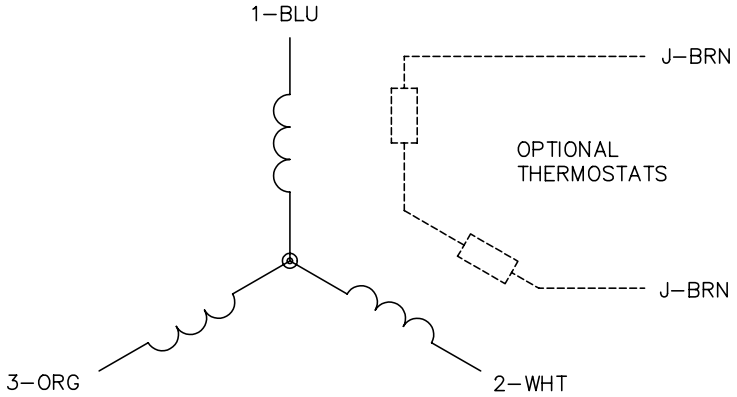

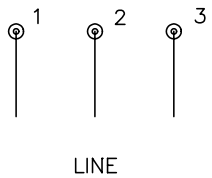

TYPICAL DELTA–CONNECTED MOTOR

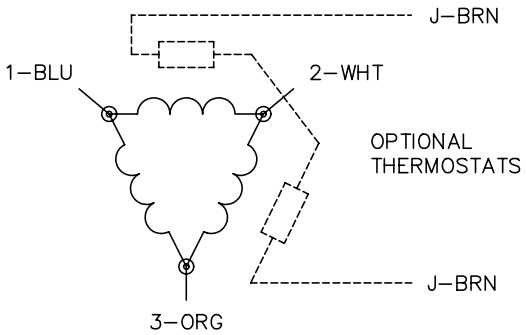

NOTES:

1. THREE LEAD MOTOR MAY BE EITHER WYE CONNECTED OR DELTA CONNECTED.
2. INTERCHANGE ANY TWO LINE LEADS TO REVERSE ROTATION.
3. OPTIONAL THERMOSTATS ARE PROVIDED WHEN SPECIFIED.
4. ACTUAL NUMBER OF INTERNAL PARALLEL CIRCUITS MAY VARY.
5. LEAD COLORS ARE OPTIONAL. LEADS MUST BE NUMBERED AS SHOWN.

REV. DESC: REVISE TO SHOW OPTIONAL COLORS			
REV. LTR: D	BY: JLP	REVISED: 01/21/99 4:02	TDR: 0171435
CD0006		FILE: AAA00005141	MDL: –
		MTL: –	

BALDOR ELECTRIC Co.

3PH, SV, 3 LEADS, WYE OR DELTA CONNECTED

CD0006

BALDOR A MEMBER OF THE ABB GROUP