BALDOR
A MEMBER OF THE ABB GROUP

BALDOR • RELIANCE

Product Information Packet

EM2515T-G

20HP,1765RPM,3PH,60HZ,256T,3948M,OPSB,F1

Copyright © All product information within this document is subject to Baldor Electric Company copyright © protection, unless otherwise noted.

Part Detail

Revision:	A	**Status:**	PRD/A	**Change #:**		**Proprietary:**	No
Type:	AC	**Prod. Type:**	3948M	**Elec. Spec:**	39WGX952	**CD Diagram:**	CD0180
Enclosure:	OPSB	**Mfg Plant:**		**Mech. Spec:**	39E366	**Layout:**	39LYE366
Frame:	256T	**Mounting:**	F1	**Poles:**	04	**Created Date:**	06-22-2016
Base:	RG	**Rotation:**	R	**Insulation:**	H	**Eff. Date:**	10-29-2016
Leads:	9#10					**Replaced By:**	
Literature:		**Elec. Diagram:**					

BALDOR
A MEMBER OF THE ABB GROUP

Nameplate NP1259L

CAT.NO.	EM2515T-G								
SPEC.	39E366X952G1								
HP	20								
VOLTS	230/460								
AMP	48/24								
RPM	1765								
FRAME	256T		HZ	60				PH	3
SER.F.	1.15	CODE	G		DES	A	CL	H	
NEMA-NOM-EFF	93	PF	85						
RATING	40C AMB-CONT								
CC	010A				USABLE AT 208V				
DE	6309		ODE	6208					
ENCL	OPSB	SN							

BALDOR
A MEMBER OF THE ABB GROUP

Parts List

Part Number	Description	Quantity
SA322856	SA 39E366X952G1	1.000 EA
RA310665	RA 39E366X952G1	1.000 EA
S/P107-000-005	SUPER-E PROC'S(254/6 FR.) ZK PLANT - POL	1.000 EA
HA6361A01	LIFTING LUG FOR 37, 39 & 40 FRAME ZINC	2.000 EA
HA6016	ADAPTER, CAST CONDUIT BOX	1.000 EA
09CB3002	CB W/1.38 LEAD HOLE FOR 37, 39, 307 & 30	1.000 EA
51XW2520A12	.25-20 X .75, TAPTITE II, HEX WSHR SLTD	2.000 EA
HW1001A25	LOCKWASHER 1/4, ZINC PLT .493 OD, .255 I	2.000 EA
WD1000B17	T&B CX35TN TERMINAL	1.000 EA
11XW1032G06	10-32 X .38, TAPTITE II, HEX WSHR SLTD U	1.000 EA
39EP3200A01SP	FR/PU ENDPLATE, MACH	1.000 EA
HW5100A08	W3118-035 WVY WSHR (WB)	1.000 EA
39EP3201A22	PU ENDPLATE, MACH	1.000 EA
XY3816A12	3/8-16 FINISHED NUT	8.000 EA
10XN2520K28	1/4-20 X 1.75" HX HD SCRWGRADE 5, ZINC P	4.000 EA
HW1001A25	LOCKWASHER 1/4, ZINC PLT .493 OD, .255 I	4.000 EA
09CB3501	CONDUIT BOX LID FOR 09CB3001 & 09CB3002	1.000 EA
51XW2520A12	.25-20 X .75, TAPTITE II, HEX WSHR SLTD	2.000 EA
HW2501G25	KEY, 3/8 SQ X 2.875	1.000 EA
LB1115N	LABEL,LIFTING DEVICE (ON ROLLS)	1.000 EA
HA4051A00	PLASTIC CAP FOR GREASE FITTING	1.000 EA
HW4500A03	GREASE FITTING, .125 NPT 1610(ALEMITE) 8	1.000 EA
HW4500A20	1/8NPT SL PIPE PLUG	1.000 EA
MJ1000A02	GREASE, POLYREX EM EXXON (USe 4824-15A)	0.030 LB

BALDOR
A MEMBER OF THE ABB GROUP

Parts List (continued)

Part Number	Description	Quantity
HA4051A00	PLASTIC CAP FOR GREASE FITTING	1.000 EA
HW4500A03	GREASE FITTING, .125 NPT 1610(ALEMITE) 8	1.000 EA
HW4500A20	1/8NPT SL PIPE PLUG	1.000 EA
MG1000Y03	MUNSELL 2.53Y 6.70/ 4.60, GLOSS 20,	0.050 GA
85XU0407S04	4X1/4 U DRIVE PIN STAINLESS	2.000 EA
39AD2002A01	BAFFLE PLATE 39 OPEN, SLOTTED BAND MTRS	1.000 EA
39AD2002A01	BAFFLE PLATE 39 OPEN, SLOTTED BAND MTRS	1.000 EA
HA3154A03	STUD, 3/8-16 X 17.75	4.000 EA
LB1119N	WARNING LABEL	1.000 EA
LC0181	CONNECTION LABEL	1.000 EA
NP1259L	ALUM SUPER-E UL CSA-EEV CC NEMA PREMIUM	1.000 EA
39PA1000	PACKAGING GROUP 39 PRINT	1.000 EA
MN416A01	TAG-INSTAL-MAINT no wire (1000/bx) 11/14	1.000 EA
LB1350	BAR CODE LABEL FOR YORK	1.000 EA

BALDOR
A MEMBER OF THE ABB GROUP

AC Induction Motor Performance Data

Record # 57686 - Typical performance - not guaranteed values

Winding: 39WGX952-R003	**Type:** 3948M	**Enclosure:** OPSB

Nameplate Data				460 V, 60 Hz: High Voltage Connection	
Rated Output (HP)	20			Full Load Torque	59.7 LB-FT
Volts	230/460			Start Configuration	direct on line
Full Load Amps	48/24			Breakdown Torque	187 LB-FT
R.P.M.	1765			Pull-up Torque	78.1 LB-FT
Hz	60	Phase	3	Locked-rotor Torque	112 LB-FT
NEMA Design Code	A	KVA Code	G	Starting Current	156 A
Service Factor (S.F.)	1.15			No-load Current	8.83 A
NEMA Nom. Eff.	93	Power Factor	85	Line-line Res. @ 25ºC	0.48438 Ω
Rating - Duty	40C AMB-CONT			Temp. Rise @ Rated Load	37°C
S.F. Amps				Temp. Rise @ S.F. Load	46°C
				Locked-rotor Power Factor	33.3

Load Characteristics 460 V, 60 Hz, 20 HP

% of Rated Load	25	50	75	100	125	150	S.F.
Power Factor	50	72	81	85	87	87	86
Efficiency	90.2	93.3	93.5	93	92.2	91	92.5
Speed	1792.2	1784.8	1776.1	1767.5	1757.6	1746.3	1762
Line amperes	10.5	14	18.6	23.8	29.4	35.6	27.2

BALDOR A MEMBER OF THE ABB GROUP

Performance Graph at 460V, 60Hz, 20.0HP Typical performance - Not guaranteed values

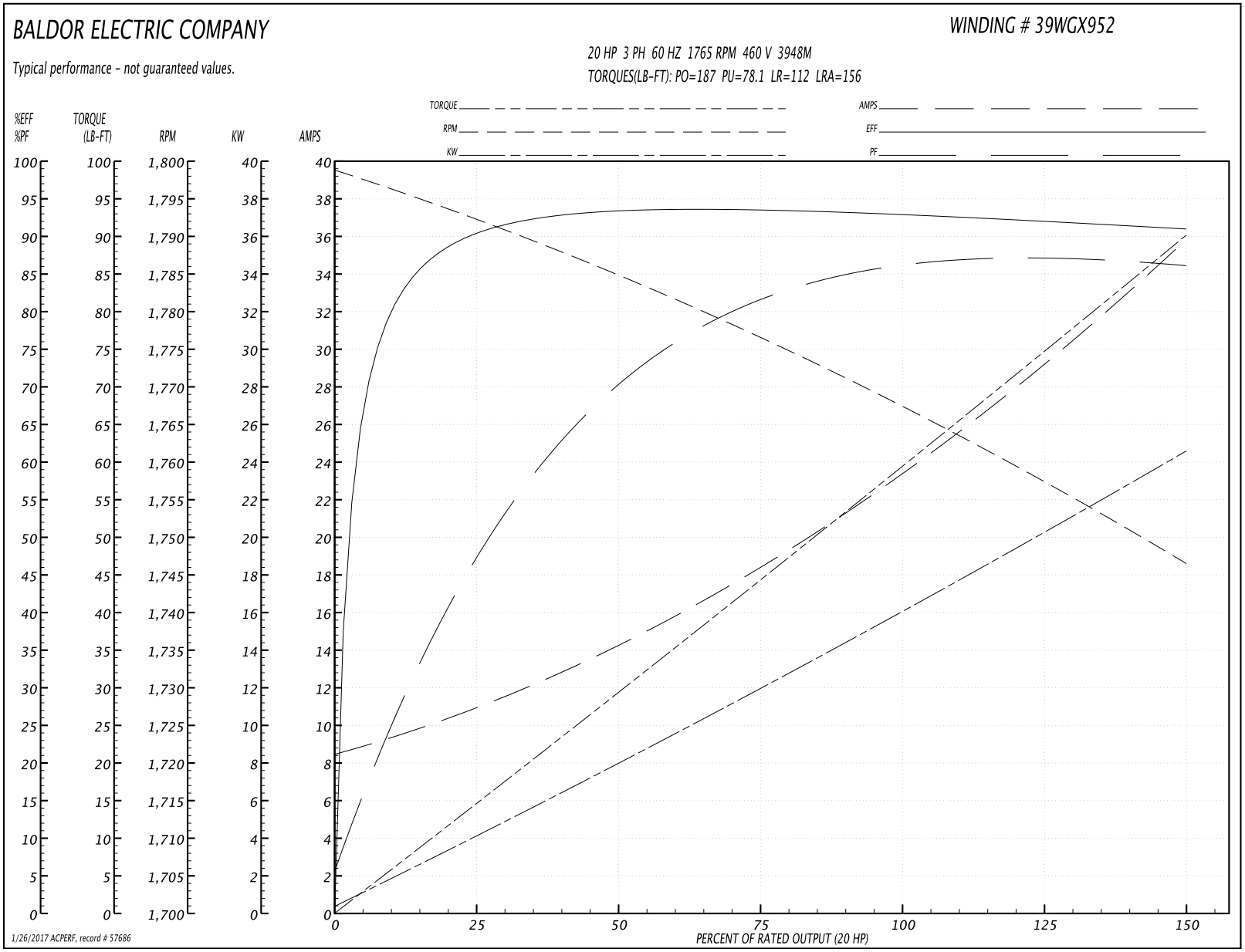

BALDOR A MEMBER OF THE ABB GROUP

39LYE366

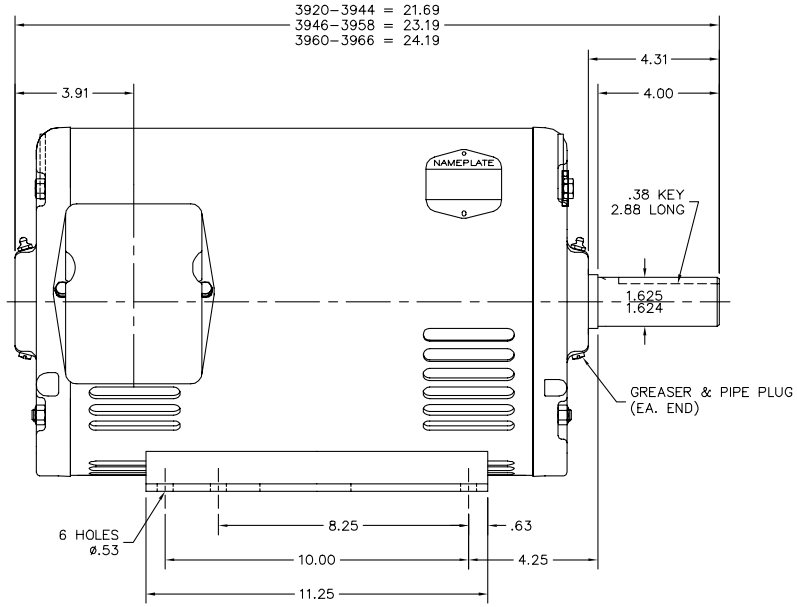

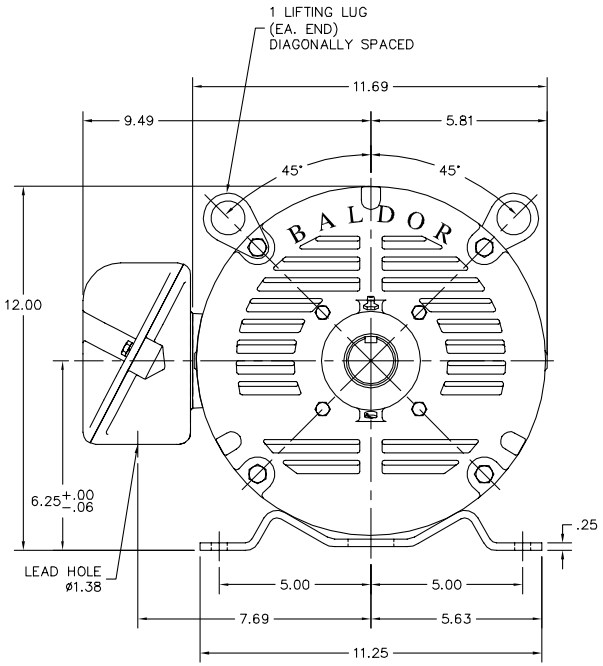

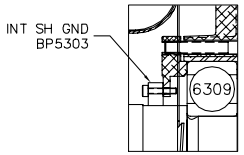

PU. BRG RETAINER DETAIL

CUSTOMER IS RESPONSIBLE FOR DETERMINING THAT BALDOR'S PRODUCT WILL PERFORM SUITABLY IN THE INTENDED APPLICATION.

REV. DESC: ADDED BEARING RETAINER SCREW GRAPHICS			BALDOR
REV. LTR: B	VERSION: 02	TDR: 000000949311	
FILE: \AAA\00174\376	REVISED: 02:19:54 10/20/2015	BY: ENSHAB0	HORZ OPSB 254–6T W/INT SH GND
MTL: –			SH 1 of 1

39LYE366

BALDOR A MEMBER OF THE ABB GROUP

CD0180

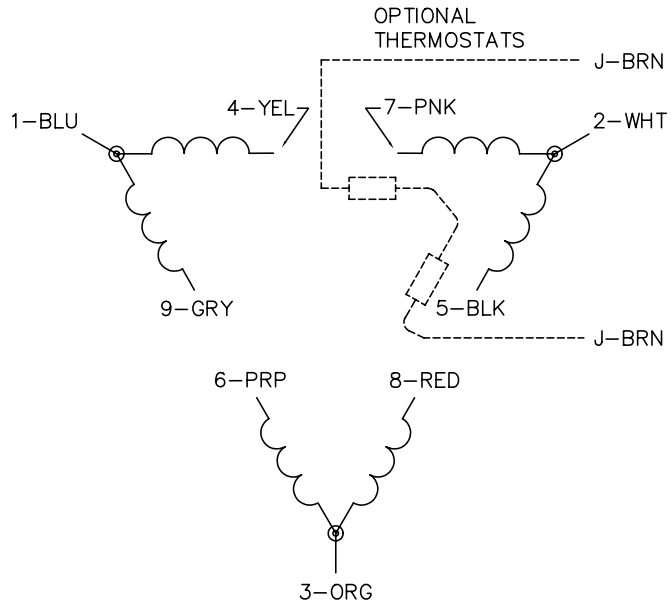

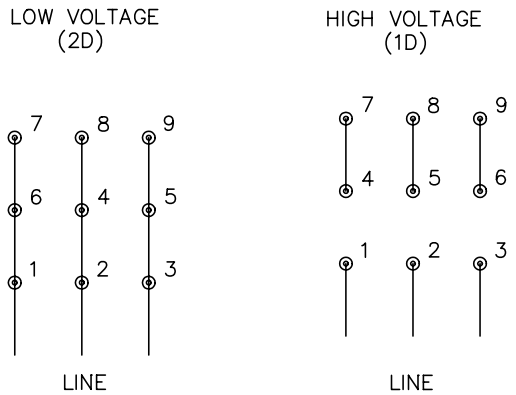

NOTES:

1. INTERCHANGE ANY TWO LINE LEADS TO REVERSE ROTATION.
2. OPTIONAL THERMOSTATS ARE PROVIDED WHEN SPECIFIED.
3. ACTUAL NUMBER OF INTERNAL PARALLEL CIRCUITS MAY BE A MULTIPLE OF THOSE SHOWN ABOVE.
4. LEAD COLORS ARE OPTIONAL. LEADS MUST ALWAYS BE NUMBERED AS SHOWN.

CD0180

REV. DESC: REVISE TO SHOW OPTIONAL COLORS			
REV. LTR: C	BY: JLP	REVISED: 01/21/99 2:28	TDR: 0171435
CD0180		FILE: AAA00005148	MDL: –
		MTL: –	

BALDOR ELECTRIC Co.

3PH, DV, 9 LEADS, DELTA CONNECTION

BALDOR
A MEMBER OF THE ABB GROUP

Marketing maintained PDF of MN416:

http://www.baldor.com/support/Literature/Load.ashx/MN416?ManNumber=MN416

BALDOR
A MEMBER OF THE ABB GROUP