BALDOR
A MEMBER OF THE ABB GROUP

BALDOR • RELIANCE

Product Information Packet

VEBM3546T

1HP,1760RPM,3PH,60HZ,143TC,3519M,TEFC,F1

Copyright © All product information within this document is subject to Baldor Electric Company copyright © protection, unless otherwise noted.

Part Detail

Revision:	L	**Status:**	PRD/A	**Change #:**		**Proprietary:**	No
Type:	AC	**Prod. Type:**	3520M	**Elec. Spec:**	35WGM492	**CD Diagram:**	CD0005
Enclosure:	TEFC	**Mfg Plant:**		**Mech. Spec:**	35E060	**Layout:**	35LYE060
Frame:	143TC	**Mounting:**	F1	**Poles:**	04	**Created Date:**	08-03-2010
Base:	N	**Rotation:**	R	**Insulation:**	F	**Eff. Date:**	08-24-2016
Leads:	9#18					**Replaced By:**	
Literature:		**Elec. Diagram:**					

BALDOR
A MEMBER OF THE ABB GROUP

Nameplate NP1259L

CAT.NO.	VEBM3546T								
SPEC.	35E060M492G1								
HP	1								
VOLTS	230/460								
AMP	3/1.5								
RPM	1760								
FRAME	143TC		HZ	60				PH	3
SER.F.	1.15	CODE	L		DES	B	CL	F	
NEMA-NOM-EFF	85.5	PF	71						
RATING	40C AMB-CONT								
CC	010A				USABLE AT 208V	3.1			
DE	6205			ODE	6203				
ENCL	TEFC	SN							

BALDOR
A MEMBER OF THE ABB GROUP

Parts List

Part Number	Description	Quantity
SA200818	SA 35E060M492G1	1.000 EA
RA188129	RA 35E060M492G1	1.000 EA
NS2512A01	INSULATOR, CONDUIT BOX X	1.000 EA
35CB3007	35 CB CASTING W/.88 DIA. LEAD HOLE	1.000 EA
36GS1000	GASKET-CONDUIT BOX, .06 THICK #SV-330 LE	1.000 EA
51XB1016A07	10-16 X 7/16 HXWSSLD SERTYB	2.000 EA
11XW1032G06	10-32 X .38, TAPTITE II, HEX WSHR SLTD U	1.000 EA
35EP3900T02	SPL FACE MTD FR EP-ENCL-W/STEARNS BRAKE	1.000 EA
HW4500A01	1641B(ALEMITE)400 UNIV, GREASE FITT	1.000 EA
HW5100A03SP	WAVY WASHER (W1543-017)	1.000 EA
35EP3300A46	PULLEY ENDPLATE, MACH	1.000 EA
HW4500A01	1641B(ALEMITE)400 UNIV, GREASE FITT	1.000 EA
51XN1032A20	10-32 X 1 1/4 HX WS SL SR	2.000 EA
HA1014A02SP	SPL SPACER FOR FAN COVER MTD ON BRAKE	3.000 EA
51XB1016A07	10-16 X 7/16 HXWSSLD SERTYB	3.000 EA
BR1003A01	BRAKE RELEASE LEVER	1.000 EA
35FH5000A08	FAN COVER ASSY FOR BRAKE MTRS,W/ PRIMER	1.000 EA
51XW1032A06	10-32 X .38, TAPTITE II, HEX WSHR SLTD S	3.000 EA
35CB4521GX	CONDUIT BOX LID KIT	1.000 EA
51XW0832A07	8-32 X .44, TAPTITE II, HEX WSHR SLTD SE	4.000 EA
HW2501D13	KEY, 3/16 SQ X 1.375	1.000 EA
HA7000A01	KEY RETAINER 7/8" DIA SHAFT	1.000 EA
85XU0407S04	4X1/4 U DRIVE PIN STAINLESS	2.000 EA
MJ1000A02	GREASE, POLYREX EM EXXON (USe 4824-15A)	0.050 LB

BALDOR A MEMBER OF THE ABB GROUP

Parts List (continued)

Part Number	Description	Quantity
HW2501D08	KEY, 3/16 SQ X .875 AUTO	1.000 EA
84XN3816J28	HEX SOC HD, 3/8-16 X 1.75 LONG	2.000 EA
35FN3002A01SP	EXFN, PLASTIC, 6.376 OD, .625 ID W/FLAT	1.000 EA
51XB1214A16	12-14X1.00 HXWSSLD SERTYB	1.000 EA
HA3100A12	THRUBOLT 10-32 X 7.375	4.000 EA
76BK2100BQF	1-056-021-00-BQF BRAKE TDR# 79345	1.000 EA
MG1000Y03	MUNSELL 2.53Y 6.70/ 4.60, GLOSS 20,	0.017 GA
LC0005E01	CONN.DIA./WARNING LABEL (LC0005/LB1119N)	1.000 EA
LB1404	BRAKE CONNECTION LABEL	1.000 EA
NP1259L	ALUM SUPER-E UL CSA-EEV CC NEMA PREMIUM	1.000 EA
G7PA1000	PKG GRP, PRINT PK1034A06	1.000 EA
PK3082	STYROFOAM CRADLE	1.000 EA
MN416A01	TAG-INSTAL-MAINT no wire (1200/bx) 11/14	1.000 EA

BALDOR
A MEMBER OF THE ABB GROUP

AC Induction Motor Performance Data

Record # 53095 - Typical performance - not guaranteed values

Winding: 35WGM492-R050	**Type:** 3520M	**Enclosure:** TEFC

Nameplate Data				460 V, 60 Hz: High Voltage Connection	
Rated Output (HP)	1			Full Load Torque	2.99 LB-FT
Volts	230/460			Start Configuration	direct on line
Full Load Amps	3/1.5			Breakdown Torque	13.5 LB-FT
R.P.M.	1760			Pull-up Torque	8.25 LB-FT
Hz	60	Phase	3	Locked-rotor Torque	8.52 LB-FT
NEMA Design Code	B	KVA Code	L	Starting Current	12.4 A
Service Factor (S.F.)	1.15			No-load Current	1.07 A
NEMA Nom. Eff.	85.5	Power Factor	71	Line-line Res. @ 25ºC	15 Ω
Rating - Duty	40C AMB-CONT			Temp. Rise @ Rated Load	36°C
S.F. Amps				Temp. Rise @ S.F. Load	42°C
				Locked-rotor Power Factor	53.8
				Rotor inertia	0.118 LB-FT2

Load Characteristics 460 V, 60 Hz, 1 HP

% of Rated Load	25	50	75	100	125	150	S.F.
Power Factor	29	46	60	69	75	79	75
Efficiency	74.2	82.9	85.4	85.8	85.4	84.5	85.4
Speed	1790	1781	1771	1760	1749	1736	1754
Line amperes	1.11	1.24	1.39	1.59	1.83	2.11	1.69

BALDOR A MEMBER OF THE ABB GROUP

Performance Graph at 460V, 60Hz, 1.0HP Typical performance - Not guaranteed values

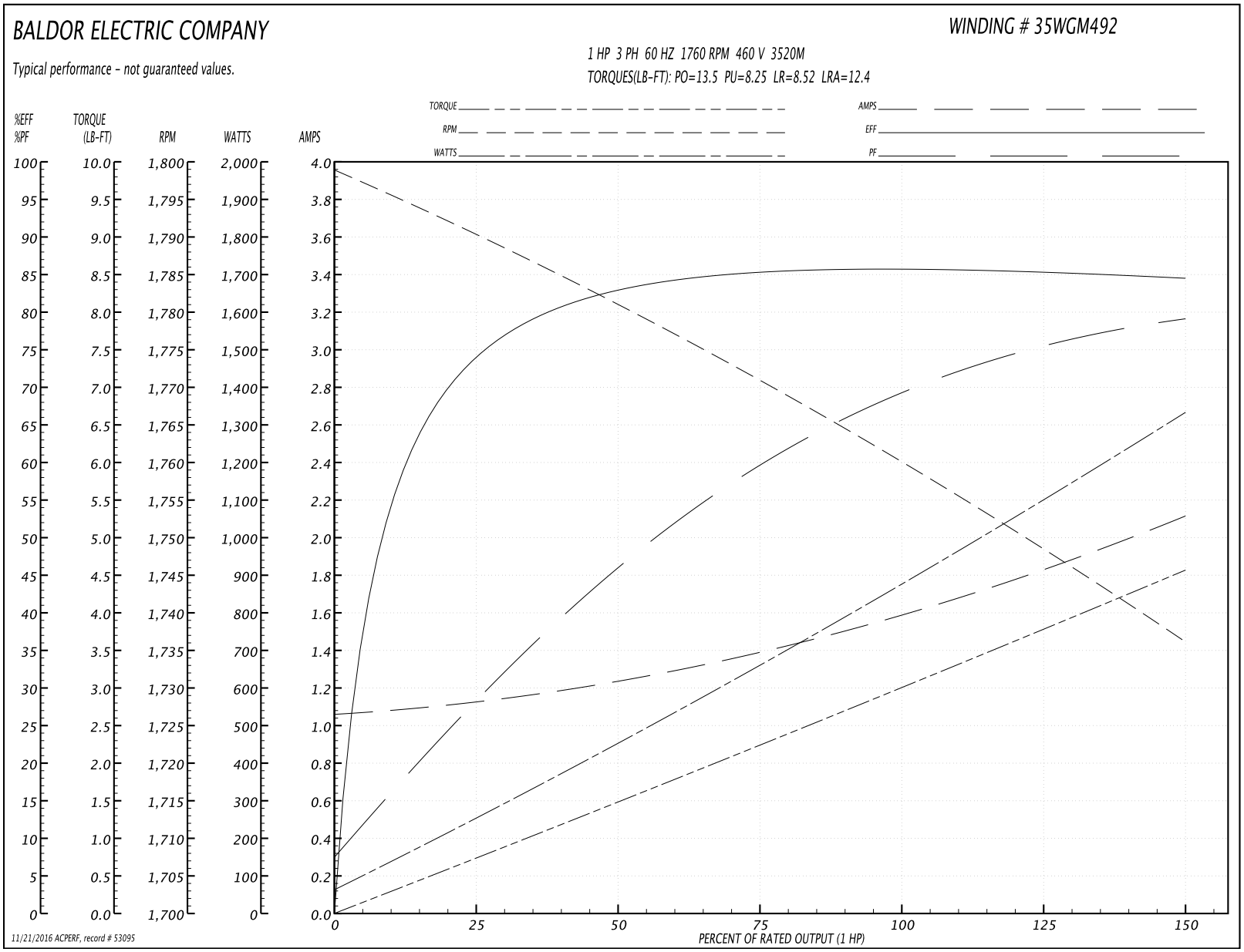

BALDOR A MEMBER OF THE ABB GROUP

AC Induction Motor Performance Data

Record # 57707 - Typical performance - not guaranteed values

Winding: 35WGM492-R050	**Type:** 3520M	**Enclosure:** TEFC

Nameplate Data				230 V, 60 Hz: High Voltage Connection	
Rated Output (HP)	1			Full Load Torque	2.99 LB-FT
Volts	230/460			Start Configuration	direct on line
Full Load Amps	3/1.5			Breakdown Torque	13.5 LB-FT
R.P.M.	1760			Pull-up Torque	8.25 LB-FT
Hz	60	Phase	3	Locked-rotor Torque	8.52 LB-FT
NEMA Design Code	B	KVA Code	L	Starting Current	24.8 A
Service Factor (S.F.)	1.15			No-load Current	2.14 A
NEMA Nom. Eff.	85.5	Power Factor	71	Line-line Res. @ 25ºC	3.75 Ω
Rating - Duty	40C AMB-CONT			Temp. Rise @ Rated Load	36°C
S.F. Amps				Temp. Rise @ S.F. Load	42°C
				Locked-rotor Power Factor	53.8
				Rotor inertia	0.118 LB-FT2

Load Characteristics 230 V, 60 Hz, 1 HP

% of Rated Load	25	50	75	100	125	150	S.F.
Power Factor	29	46	60	69	75	79	74
Efficiency	74.2	82.9	85.4	85.8	85.4	84.5	85.6
Speed	1790	1781	1771	1760	1749	1736	1754
Line amperes	2.22	2.48	2.78	3.18	3.66	4.22	1.69

BALDOR
A MEMBER OF THE ABB GROUP

Performance Graph at 230V, 60Hz, 1.0HP Typical performance - Not guaranteed values

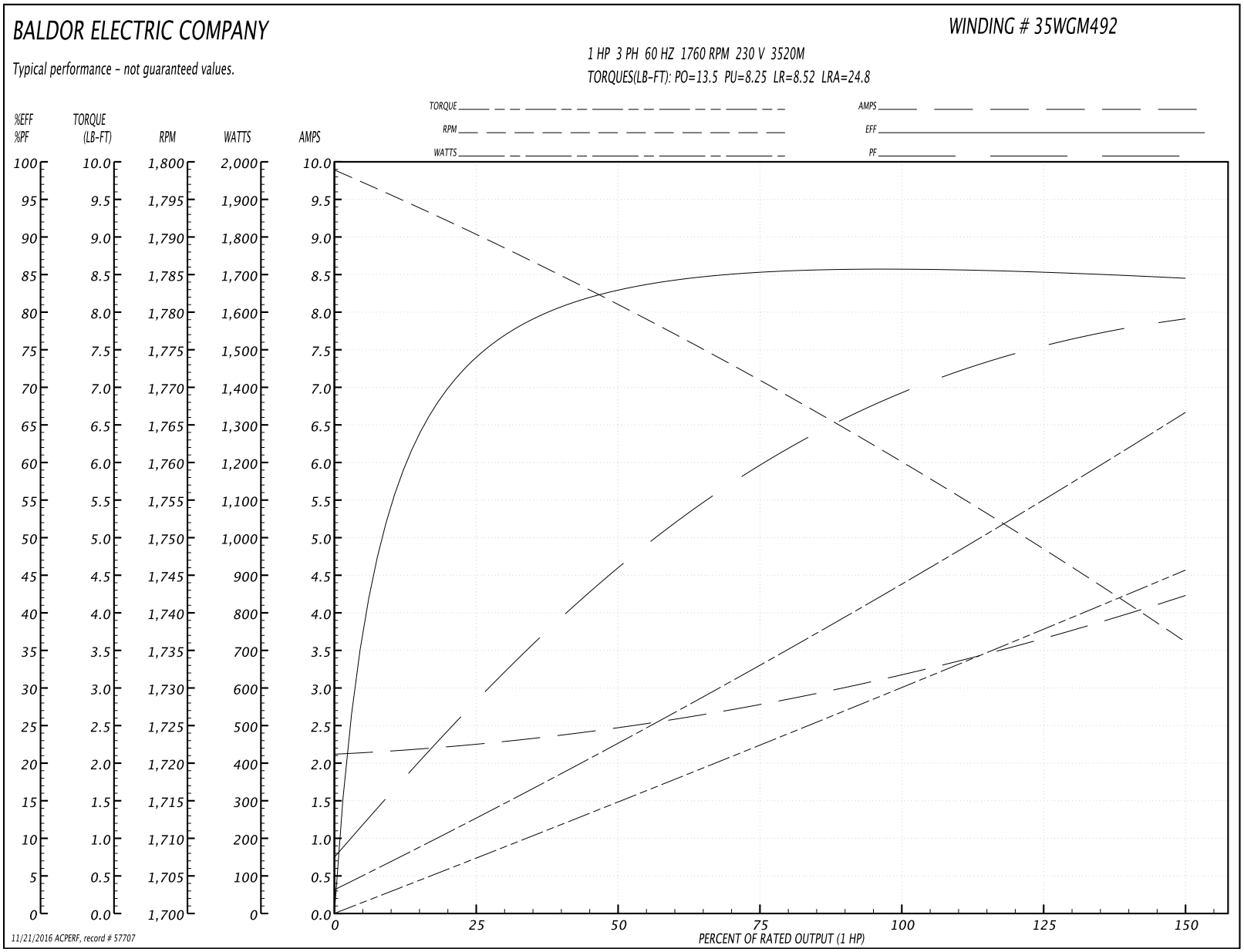

BALDOR A MEMBER OF THE ABB GROUP

35LYE060

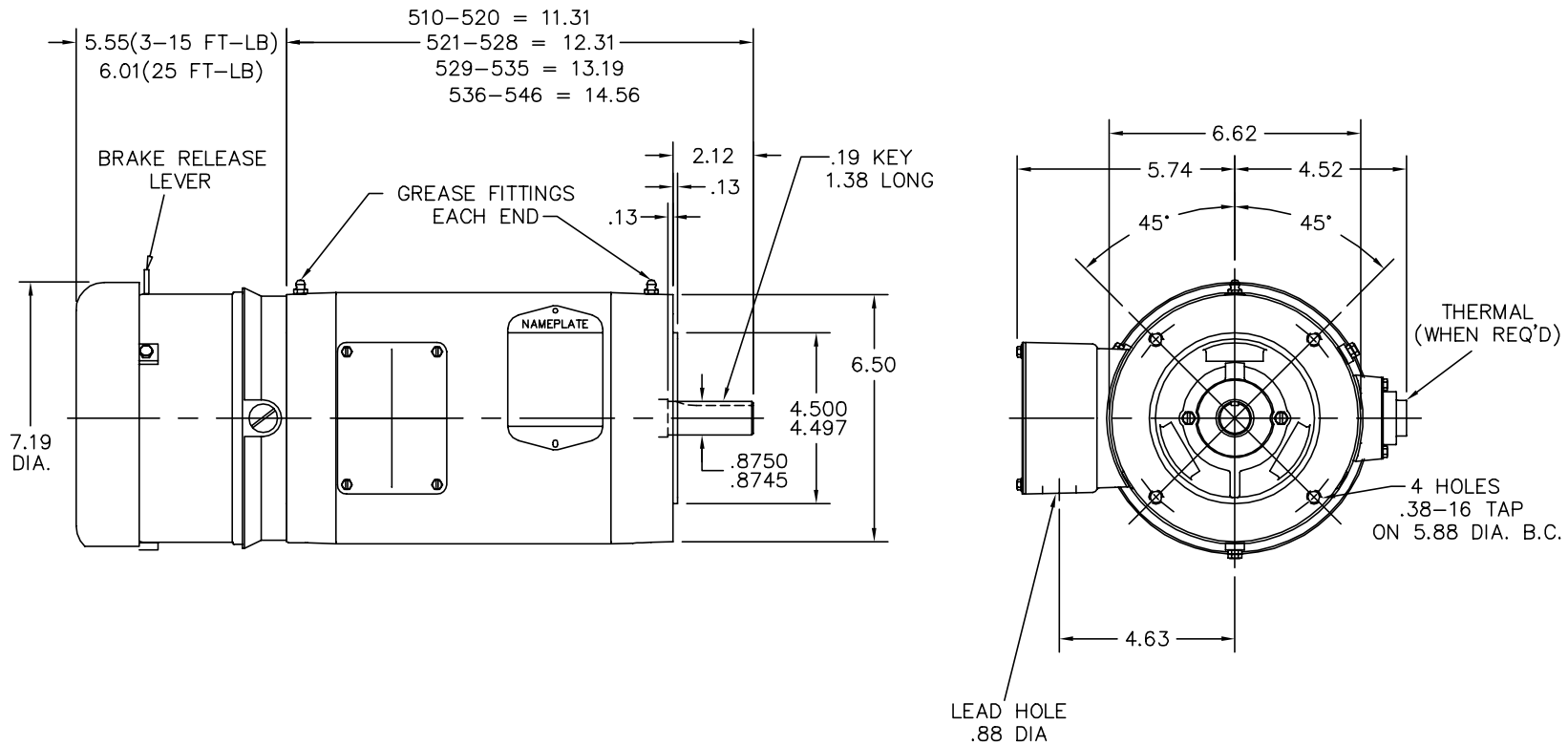

35LYE060

CUSTOMER IS RESPONSIBLE FOR DETERMINING THAT BALDOR'S PRODUCT WILL PERFORM SUITABLY IN THE INTENDED APPLICATION.

REV. DESC: OMIT SCREW HEADS ON FAN COVER			BALDOR
REV. LTR: H	VERSION: 01	TDR: 000000812015	
FILE: \AAA\00006\569	REVISED: 04:36:48 08/07/2013	BY: ENKANV0	STD VERT 143–5TC TEFC 35M FACE MTD W/BRAKE
MTL: –			SH 1 of 1

BALDOR A MEMBER OF THE ABB GROUP

CD0005

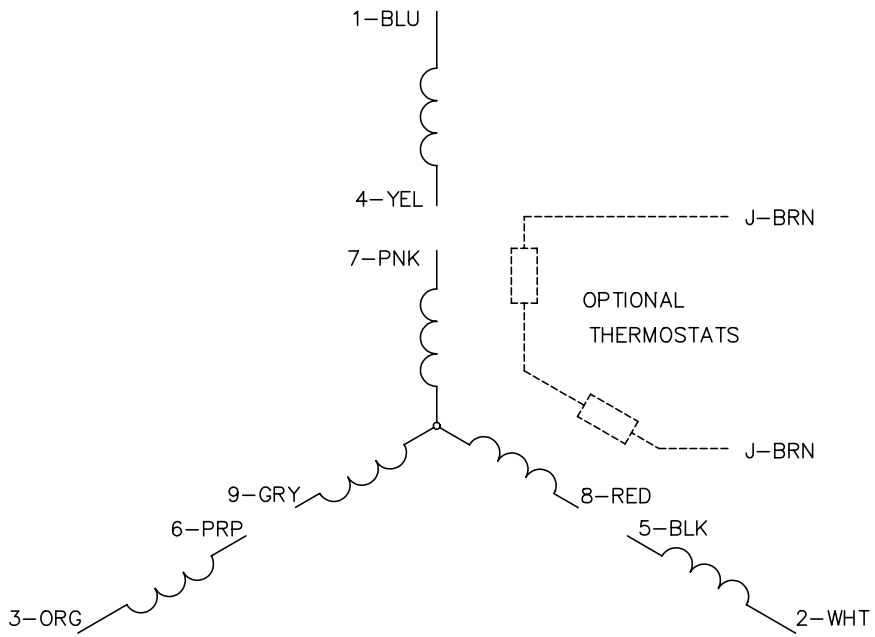

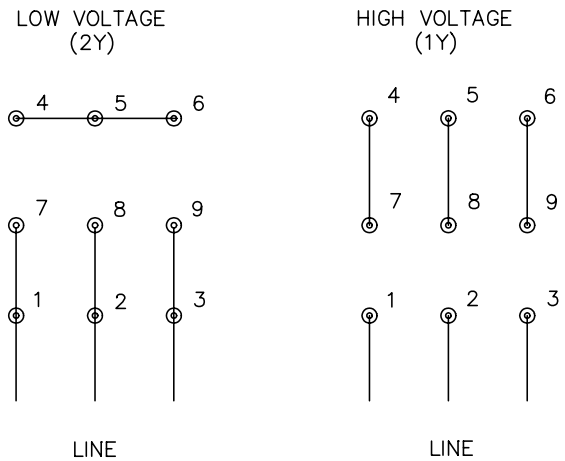

NOTES:

1. INTERCHANGE ANY TWO LINE LEADS TO REVERSE ROTATION.
2. OPTIONAL THERMOSTATS ARE PROVIDED WHEN SPECIFIED.
3. ACTUAL NUMBER OF INTERNAL PARALLEL CIRCUITS MAY BE A MULTIPLE OF THOSE SHOWN ABOVE.
4. LEAD COLORS ARE OPTIONAL. LEADS MUST ALWAYS BE NUMBERED AS SHOWN.

REV. DESC: REVISE TO SHOW OPTIONAL COLORS			BALDOR ELECTRIC Co.
REV. LTR: E	BY: JLP	REVISED: 01/19/99 10:15	TDR: 0171435
CD0005		FILE: AAA00005140	MDL: –
		MTL: –	3PH, DV, 9 LEADS

CD0005

BALDOR A MEMBER OF THE ABB GROUP