BALDOR
A MEMBER OF THE ABB GROUP

BALDOR • RELIANCE

Product Information Packet

VECP83769T-4

7.5HP,3510RPM,3PH,60HZ,213TC,0731M,TEFC

Copyright © All product information within this document is subject to Baldor Electric Company copyright © protection, unless otherwise noted.

Part Detail

Revision:	R	**Status:**	PRD/A	**Change #:**		**Proprietary:**	No
Type:	AC	**Prod. Type:**	0732M	**Elec. Spec:**	07WGY929	**CD Diagram:**	CD0006
Enclosure:	TEFC	**Mfg Plant:**		**Mech. Spec:**	07M323	**Layout:**	07LYM323
Frame:	213TC	**Mounting:**	F1	**Poles:**	02	**Created Date:**	08-21-2012
Base:	N	**Rotation:**	R	**Insulation:**	F	**Eff. Date:**	11-10-2016
Leads:	3#14					**Replaced By:**	
Literature:		**Elec. Diagram:**					

BALDOR
A MEMBER OF THE ABB GROUP

Nameplate NP3235E

CAT.NO.	VECP83769T-4						
SPEC.	07M323Y929G1						
HP	7.5 TE			IP	56		
VOLTS	460						
AMP	8.6						
RPM	3510						
FRAME	213TC	HZ	60			PH	3
SER.F.	1.15	CODE	H	DES	B	CL	F
RATING	40C AMB-CONT						
SN							
DE	6307	ODE	6307				
NEMA-NOM-EFF	91.7	PF	88				
G.MIN.EFF	90.2	CC	010A				
T. CODE	T3C	T=	160				

BALDOR
A MEMBER OF THE ABB GROUP

Nameplate NP3186E

SPEC.	07M323Y929G1				
D.E. BRG.	35BC03X30X				
O.D.E. BRG.	35BC03X30X				
GREASE	POLYREX EM				
WEIGHT	169	# OF ROTOR BARS	28	# OF STATOR SLOTS	36
RPM MAX	5400	MAX. KVAR	.33		
BLANK					
INV.TYPE	PWM				
T=	160				
C HP FR	60	C HP TO	90		
CT HZ FROM	6	CT HZ TO	60		
VT HZ FROM	3	VT HZ TO	60		
HTR-VOLTS	N/A	HTR-AMPS	N/A		
HTR-WATTS				MAX. SPACE HEATER TEMP.	N/A

BALDOR
A MEMBER OF THE ABB GROUP

Parts List

Part Number	Description	Quantity
SA250089	SA 07M323Y929G1	1.000 EA
RA236949	RA 07M323Y929G1	1.000 EA
36FN3000C02	EXFN, PLASTIC, 5.25 OD, 1.175 ID	1.000 EA
HW3201A05	3/8-16 EYEBOLT	1.000 EA
09CB1002A05G	CONDUIT BOX, 1.00 N.P.T. (GRAY)	1.000 EA
RM1017	LEAD SEPERATOR GASKET MODEL 307 1/8" THK	1.000 EA
51XW2520A12	.25-20 X .75, TAPTITE II, HEX WSHR SLTD	2.000 EA
11XW1032G06	10-32 X .38, TAPTITE II, HEX WSHR SLTD U	1.000 EA
HW3001B01	BRASS CUP WASHER, FOR #8 SCREW	1.000 EA
10XN2520S06	1/4 20X3/8 HX HD CAP S.S.	2.000 EA
WD1000B16	T&B CX70TN TERMINAL	2.000 EA
07EP1119A02G	206 BRG,C.I.FH,GRSR,RLF,DRAIN FITTING,IN	1.000 EA
HW4601A25	200.O SEAL, 307 BRG, VBX,	1.000 EA
10XN2520A26	1/4-20X 1 5/8 HEX HD	4.000 EA
HW4500A32	FIT./EXT 1698-B (ALEMITE)GREASE FITTING	1.000 EA
HA4051A00	PLASTIC CAP FOR GREASE FITTING	1.000 EA
HW4500A17	317400 ALEMITE GREASE RELIEF	1.000 EA
HA4010A01	DRAIN PLUG,416 S.S.,W/ 1/4-28 THD & .076	1.000 EA
HW5100A08	W3118-035 WVY WSHR (WB)	1.000 EA
37EP1314A01G	PU ENDPLATE, MACH GRAY	1.000 EA
HW4601A25	200.O SEAL, 307 BRG, VBX,	1.000 EA
HW4500A01	1641B(ALEMITE)400 UNIV, GREASE FITT	1.000 EA
HA4051A00	PLASTIC CAP FOR GREASE FITTING	1.000 EA
HW4500A17	317400 ALEMITE GREASE RELIEF	1.000 EA

BALDOR
A MEMBER OF THE ABB GROUP

Parts List (continued)

Part Number	Description	Quantity
HA4002A01	DRAIN PLUG STAINLESS STL	1.000 EA
10XN2520A30	HEX HD CAP SCREW-STD THD-.25 X 20 THD PE	4.000 EA
51XB1214A20	12-14X1.25 HXWSSLD SERTYB	1.000 EA
XY3118A12	5/16-18 HEX NUT DIRECTIONAL SERRATION	4.000 EA
07FH1001A01G	SPL FAN HOUSING, 307, W/GREASER, GRAY EP	1.000 EA
10XN2520A28	1/4-20X 1 3/4 HEX HD	3.000 EA
WD4100A02	DP-1000 HEYCO PLUG OR 62MP1000 MICRO PL	1.000 EA
12CB1503A03G	CONDUIT BOX LID, MACH (GRAY), WITH LIP	1.000 EA
09GS1013A01	09 GS FOR 09CB3501 LID - BLACK NEOPRENE	1.000 EA
10XN2520A12	O1/4-20X 3/4 HEX HEAD CAP	2.000 EA
HW1001A25	LOCKWASHER 1/4, ZINC PLT .493 OD, .255 I	2.000 EA
MJ5004A59	ADHESIVE LOCTITE #401 SURFACE INSENSITIV	0.010 EA
HW2501F21	KEY, 5/16 SQ X 2.375	1.000 EA
HA7000A02	KEY RETAINER RING, 1 1/8 DIA, 1 3/8 DIA	1.000 EA
MJ5001A27	32220KN GRAY SEALER *MIN BUY 4 QTS=1GAL	0.001 QT
MJ1000A73	INPRO P-80 ASSEMBLY LUB./ 1 QT. CONTAINE	0.001 QT
85XU0407S04	4X1/4 U DRIVE PIN STAINLESS	4.000 EA
LB1115N	LABEL,LIFTING DEVICE (ON ROLLS)	1.000 EA
LT0019A00	MOTOR NO-LOAD PERFORMANCE DATA SHEET	1.000 EA
WD1000D21	TRM,T&B #B71M,RING,18-14,.25,NON-INSL	3.000 EA
MJ1000A02	GREASE, POLYREX EM EXXON (USe 4824-15A)	0.050 LB
MG1025N19	WILKOFAST, 778.50, RELIANCE BLUE-GREEN	0.036 GA
HA3104A32	THRUBOLT- 5/16-18 X12.750	4.000 EA
LB1119N	WARNING LABEL	1.000 EA

BALDOR
A MEMBER OF THE ABB GROUP

LC0006	CONNECTION LABEL	1.000 EA
LB1449	DIV-2/NEC WARNING LABEL	1.000 EA
NP3235E	SS IEEE841 DIV-2 UL CSA-C US EEV PREM	1.000 EA
NP3186E	SS IEEE841 INV AUX DATA INFORMATION	1.000 EA
07PA1011	PKG GRP, 07 CAST IRON PK1181	1.000 EA
07PA1095	PKG GRP, VER 07 CAST IRON	1.000 EA
MN416A01	TAG-INSTAL-MAINT no wire (1200/bx) 11/14	1.000 EA

AC Induction Motor Performance Data

Record # 47126 - Typical performance - not guaranteed values

Winding: 07WGY929-R034	**Type:** 0732M	**Enclosure:** TEFC

Nameplate Data				460 V, 60 Hz: Single Voltage Motor	
Rated Output (HP)	7.5			Full Load Torque	11.1 LB-FT
Volts	460			Start Configuration	direct on line
Full Load Amps	8.6			Breakdown Torque	45.1 LB-FT
R.P.M.	3510			Pull-up Torque	15 LB-FT
Hz	60	Phase	3	Locked-rotor Torque	21.3 LB-FT
NEMA Design Code	B	KVA Code	H	Starting Current	61.4 A
Service Factor (S.F.)	1.15			No-load Current	2.75 A
NEMA Nom. Eff.	91.7	Power Factor	88	Line-line Res. @ 25ºC	1.14 Ω
Rating - Duty	40C AMB-CONT			Temp. Rise @ Rated Load	41°C
S.F. Amps				Temp. Rise @ S.F. Load	50°C
				Locked-rotor Power Factor	31.7
				Rotor inertia	0.292 LB-FT2

Load Characteristics 460 V, 60 Hz, 7.5 HP

% of Rated Load	25	50	75	100	125	150	S.F.
Power Factor	57	78	85	89	89	90	89
Efficiency	86.8	91.2	92.2	91.9	90.9	89.8	91.2
Speed	3579	3558	3536	3511	3484	3453	3494
Line amperes	3.42	4.86	6.63	8.52	10.7	13	9.84

BALDOR A MEMBER OF THE ABB GROUP

Performance Graph at 460V, 60Hz, 7.5HP Typical performance - Not guaranteed values

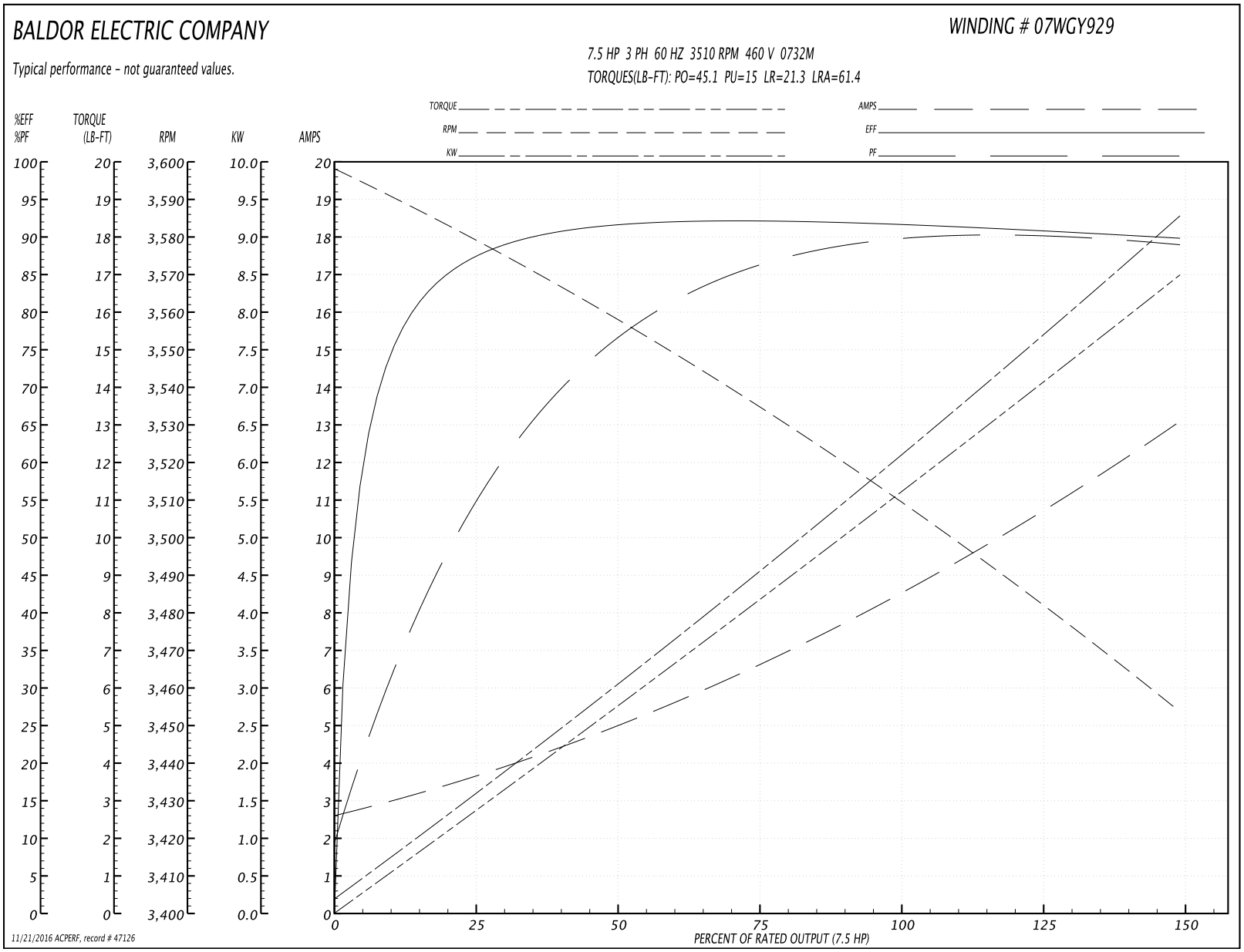

BALDOR A MEMBER OF THE ABB GROUP

07LYM323

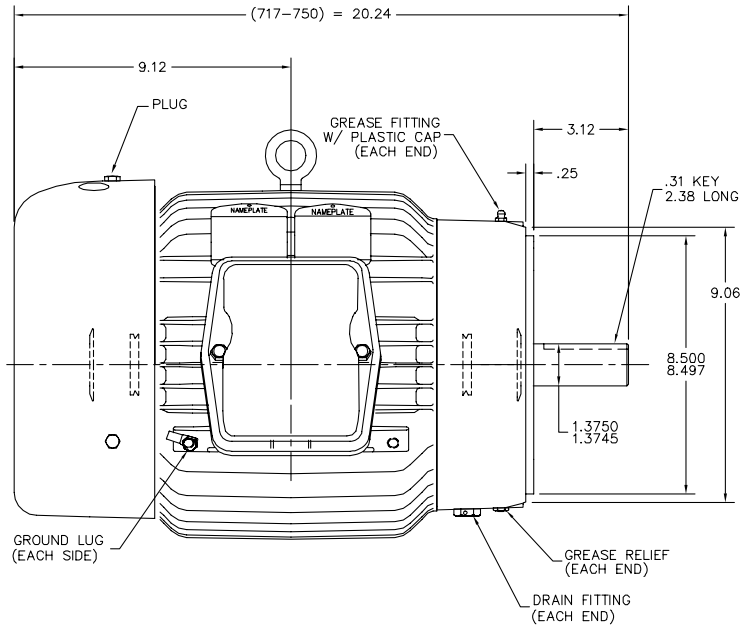

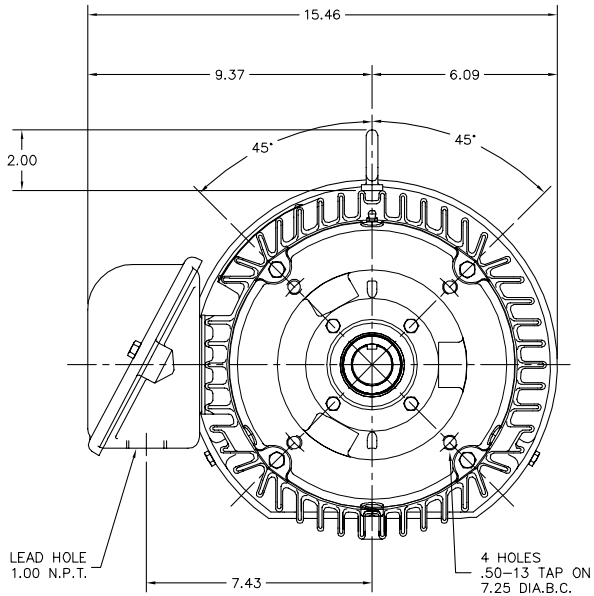

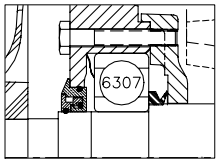

FRONT END DETAIL

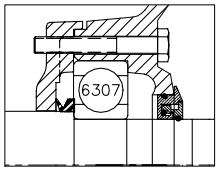

PULLEY END DETAIL

07LYM323

CUSTOMER IS RESPONSIBLE FOR DETERMINING THAT BALDOR'S PRODUCT WILL PERFORM SUITABLY IN THE INTENDED APPLICATION.

REV. DESC: MOVE FAN HOUSING TO CORRECT POSITION – UPDATE CLAS			BALDOR
REV. LTR: A	VERSION: 01	TDR: 000000783061	
FILE: \AAA\00194\392	REVISED: 12:26:21 01/25/2013	BY: ENCARJ0	STD VERT 213–5TC TEFC M IEEE841
MTL: –			SH 1 of 1

BALDOR
A MEMBER OF THE ABB GROUP

CD0006

TYPICAL WYE–CONNECTED MOTOR

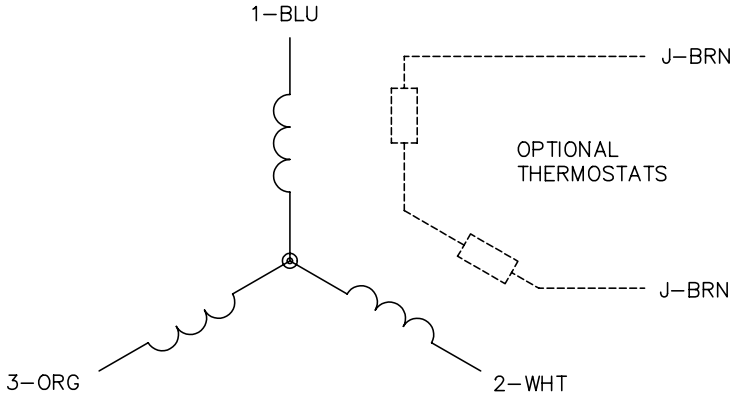

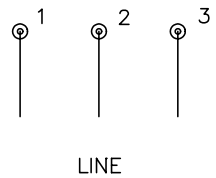

TYPICAL DELTA–CONNECTED MOTOR

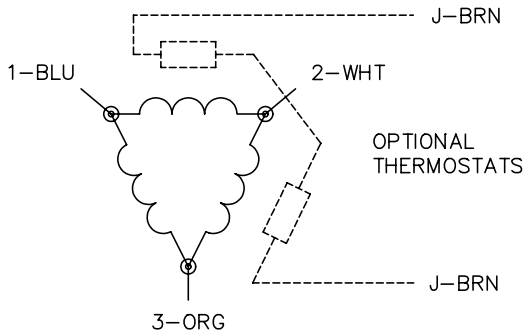

NOTES:

1. THREE LEAD MOTOR MAY BE EITHER WYE CONNECTED OR DELTA CONNECTED.
2. INTERCHANGE ANY TWO LINE LEADS TO REVERSE ROTATION.
3. OPTIONAL THERMOSTATS ARE PROVIDED WHEN SPECIFIED.
4. ACTUAL NUMBER OF INTERNAL PARALLEL CIRCUITS MAY VARY.
5. LEAD COLORS ARE OPTIONAL. LEADS MUST BE NUMBERED AS SHOWN.

REV. DESC: REVISE TO SHOW OPTIONAL COLORS			
REV. LTR: D	BY: JLP	REVISED: 01/21/99 4:02	TDR: 0171435
CD0006		FILE: AAA00005141	MDL: –
		MTL: –	

BALDOR ELECTRIC Co.

3PH, SV, 3 LEADS, WYE OR DELTA CONNECTED

CD0006

BALDOR A MEMBER OF THE ABB GROUP