BALDOR
A MEMBER OF THE ABB GROUP

BALDOR • RELIANCE

Product Information Packet

EM7058T-5

25HP,1780RPM,3PH,60HZ,284T,1050M,XPFC,F1

Copyright © All product information within this document is subject to Baldor Electric Company copyright © protection, unless otherwise noted.

Part Detail

Revision:	P	**Status:**	PRD/A	**Change #:**		**Proprietary:**	No
Type:	AC	**Prod. Type:**	1050M	**Elec. Spec:**	10WGW718	**CD Diagram:**	CD0006
Enclosure:	XPFC	**Mfg Plant:**		**Mech. Spec:**	10E106	**Layout:**	10LYE106
Frame:	284T	**Mounting:**	F1	**Poles:**	04	**Created Date:**	06-28-2010
Base:	RG	**Rotation:**	R	**Insulation:**	B	**Eff. Date:**	01-04-2017
Leads:	3#10					**Replaced By:**	
Literature:		**Elec. Diagram:**					

BALDOR
A MEMBER OF THE ABB GROUP

Nameplate NP1426XPSLEV

NO.		CC	010A
SER.			
SPEC.	10E106W718G2		
CAT.NO.	EM7058T-5		
HP	25	T. CODE	T3C
VOLTS	575		
AMPS	24.5		
RPM	1780		
HZ	60	PH	3
SER.F.	1.00	DES	B
RATING	40C AMB-CONT		
FRAME	284T	NEMA-NOM-EFF	93.6
USABLE AT 208V		PF	82
BLANK			

CL	B	CODE	G

BALDOR
A MEMBER OF THE ABB GROUP

Parts List

Part Number	Description	Quantity
SA199266	SA 10E106W718G2	1.000 EA
RA186602	RA 10E106W718G2	1.000 EA
12CB1001A01	K.O.BOX, MACH X-PROOF, 1.50 NPT HOLE	1.000 EA
10XN3118K16	5/16-18 X 1' GRADE #5, STL, ZINC PLATE	4.000 EA
HW1001A31	LOCKWASHER 5/16, ZINC PLT.591 OD, .319 I	4.000 EA
WD1000B16	T&B CX70TN TERMINAL	1.000 EA
10XN2520K06	1/4-20 X 3/8" HX HD SCREWGRADE 5, ZINC P	1.000 EA
HW1001A25	LOCKWASHER 1/4, ZINC PLT .493 OD, .255 I	1.000 EA
10EP1701A01	FR ENDPLATE, MACH	1.000 EA
HA3050A03	3/8-16 X 2.25" GRADE 8 BOLT	4.000 EA
HW1001A38	LOCKWASHER 3/8, ZINC PLT .688 OD, .382 I	4.000 EA
HW5100A11	W3917-042 WVY WSHR (WB)	1.000 EA
10EP1709A08	PU ENDPLATE, X-PROOF W/LABYRINTH SHAFT G	1.000 EA
HA3050A03	3/8-16 X 2.25" GRADE 8 BOLT	4.000 EA
HW1001A38	LOCKWASHER 3/8, ZINC PLT .688 OD, .382 I	4.000 EA
10XN2520K40	1/4-20 X 2-1/2 HEX HD CAPSCREW,GRADE 5,Z	4.000 EA
HW1001A25	LOCKWASHER 1/4, ZINC PLT .493 OD, .255 I	4.000 EA
10FH1008A01	310 FAN HOUSING X-PROOF MACH.	1.000 EA
10XN3118K12	5/16-18 X .75 GRADE 5, ZINC PLATED	3.000 EA
HW1001A31	LOCKWASHER 5/16, ZINC PLT.591 OD, .319 I	3.000 EA
12CB1501A01	COND.BOX LID, MACH., X-PROOF, 310,312	1.000 EA
10XN3816K20	3/8-16 X 1.25 HEX HD CAP GRADE 5	6.000 EA
HW1001A38	LOCKWASHER 3/8, ZINC PLT .688 OD, .382 I	6.000 EA
HW2501H28	KEY, 1/2 SQ X 3.250	1.000 EA

BALDOR
A MEMBER OF THE ABB GROUP

Parts List (continued)

Part Number	Description	Quantity
LB1115N	LABEL,LIFTING DEVICE (ON ROLLS)	1.000 EA
LB1073	ALUM XP CAUTION LABEL	1.000 EA
MN416A01	TAG-INSTAL-MAINT no wire (1000/bx) 11/14	1.000 EA
WD4100A03	DE-750 HEYCO PLUG 62MP0750 MICRO PLASTIC	1.000 EA
HW4500A20	1/8NPT SL PIPE PLUG	2.000 EA
MJ1000A02	GREASE, POLYREX EM EXXON (USe 4824-15A)	0.130 LB
HW4500A20	1/8NPT SL PIPE PLUG	2.000 EA
09FN3001C02	EXTERNAL FAN, PLASTIC	1.000 EA
HW2500A25	WOODRUFF KEY USA #1008 #BLOW CARBON STEE	1.000 EA
51XB1214A20	12-14X1.25 HXWSSLD SERTYB	1.000 EA
MG1025G05	WILKOFAST, 789.227, MED. GRAY CHAR. MET.	0.125 GA
85XU0407S04	4X1/4 U DRIVE PIN STAINLESS	6.000 EA
LB1119N	WARNING LABEL	1.000 EA
LC0006	CONNECTION LABEL	1.000 EA
NP1426XPSLEV	SS XP UL CSA-EEV CC CL-I GP-D	1.000 EA
12PA1000	PACKAGING GROUP PRINT PK1024A06	1.000 EA

BALDOR
A MEMBER OF THE ABB GROUP

AC Induction Motor Performance Data

Record # 35479 - Typical performance - not guaranteed values

Winding: 10WGW718-R009	**Type:** 1050M	**Enclosure:** XPFC

Nameplate Data				575 V, 60 Hz: Single Voltage Motor	
Rated Output (HP)	25			Full Load Torque	74 LB-FT
Volts	575			Start Configuration	direct on line
Full Load Amps	24.5			Breakdown Torque	226 LB-FT
R.P.M.	1780			Pull-up Torque	101 LB-FT
Hz	60	Phase	3	Locked-rotor Torque	137 LB-FT
NEMA Design Code	B	KVA Code	G	Starting Current	150 A
Service Factor (S.F.)	1			No-load Current	9.55 A
NEMA Nom. Eff.	93.6	Power Factor	82	Line-line Res. @ 25ºC	0.452 Ω
Rating - Duty	40C AMB-CONT			Temp. Rise @ Rated Load	57°C
				Locked-rotor Power Factor	33
				Rotor inertia	3.96 LB-FT2

Load Characteristics 575 V, 60 Hz, 25 HP

% of Rated Load	25	50	75	100	125	150
Power Factor	49	70	79	82	86	86
Efficiency	85.8	91	92.7	93	92.7	91.6
Speed	1793	1787	1781	1774	1766	1758
Line amperes	11.4	14.9	19.2	24.5	29.4	35.2

BALDOR A MEMBER OF THE ABB GROUP

Performance Graph at 575V, 60Hz, 25.0HP Typical performance - Not guaranteed values

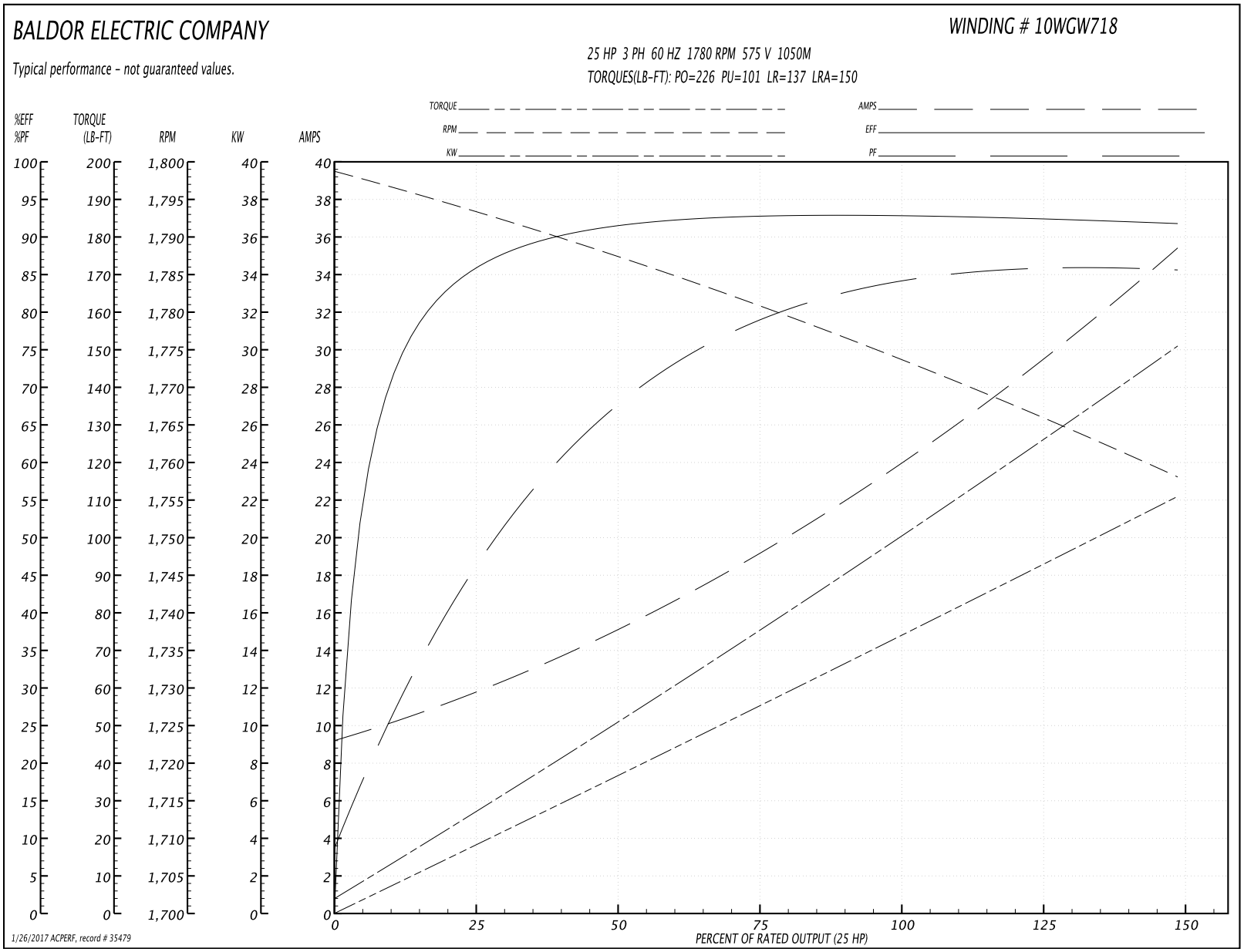

BALDOR A MEMBER OF THE ABB GROUP

10LYE106

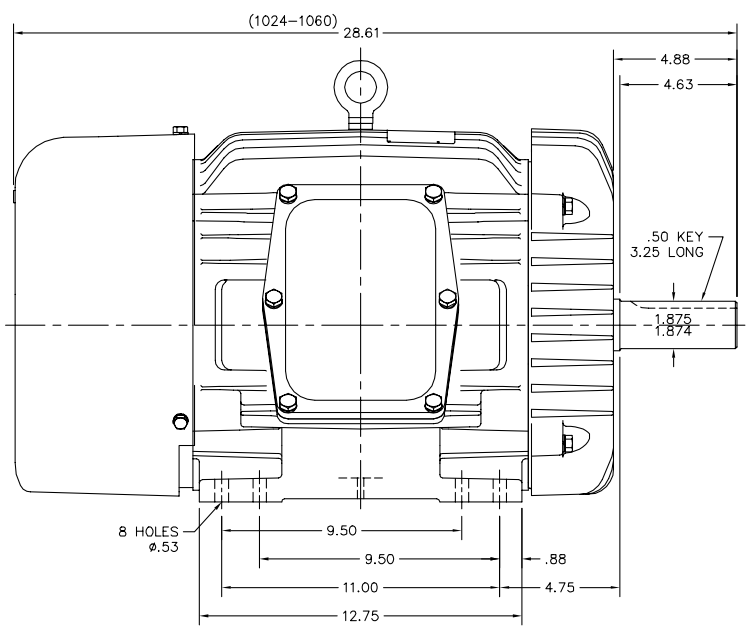

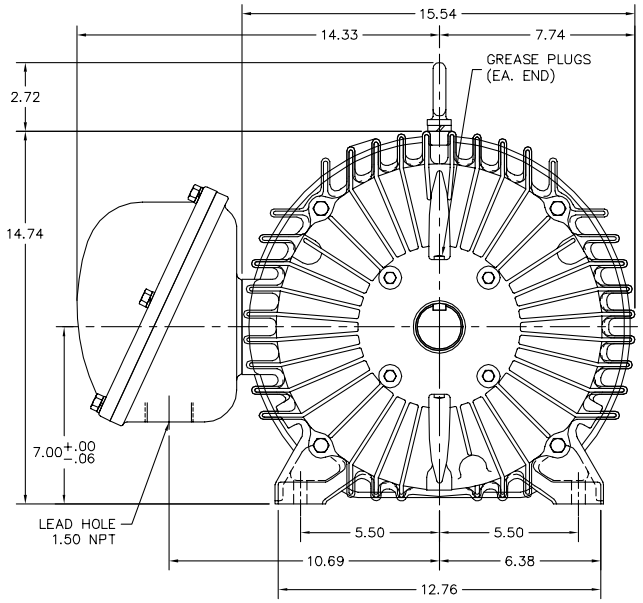

10LYE106

CUSTOMER IS RESPONSIBLE FOR DETERMINING THAT BALDOR'S PRODUCT WILL PERFORM SUITABLY IN THE INTENDED APPLICATION.

REV. DESC: CHG LD HL TO 1.50 NPT			BALDOR
REV. LTR: L	VERSION: 03	TDR: 000000927404	
FILE: \AAA\00001\944	REVISED: 01:28:52 06/09/2015	BY: ENCARCO	HORZ XPFC 284–6T CL.I GP.D,CL.II GP.F&G
MTL: –			SH 1 of 1

BALDOR
A MEMBER OF THE ABB GROUP

CD0006

TYPICAL WYE–CONNECTED MOTOR

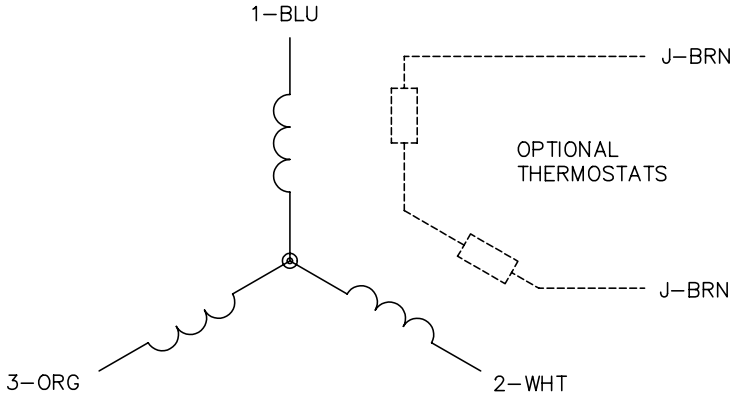

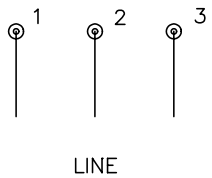

TYPICAL DELTA–CONNECTED MOTOR

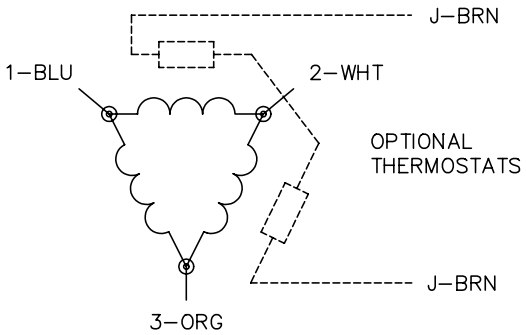

NOTES:

1. THREE LEAD MOTOR MAY BE EITHER WYE CONNECTED OR DELTA CONNECTED.
2. INTERCHANGE ANY TWO LINE LEADS TO REVERSE ROTATION.
3. OPTIONAL THERMOSTATS ARE PROVIDED WHEN SPECIFIED.
4. ACTUAL NUMBER OF INTERNAL PARALLEL CIRCUITS MAY VARY.
5. LEAD COLORS ARE OPTIONAL. LEADS MUST BE NUMBERED AS SHOWN.

REV. DESC: REVISE TO SHOW OPTIONAL COLORS			
REV. LTR: D	BY: JLP	REVISED: 01/21/99 4:02	TDR: 0171435
CD0006		FILE: AAA00005141	MDL: –
		MTL: –	

BALDOR ELECTRIC Co.

3PH, SV, 3 LEADS, WYE OR DELTA CONNECTED

CD0006

BALDOR A MEMBER OF THE ABB GROUP