PumpCatalog.com

BERKELEY®

# TYPE "B" SINGLE STAGE CENTRIFUGAL PUMP
# Bearing Frame Mount

| Section | FM |
|---|---|
| Page | 330.2 |
| Date | January 1, 2004 |
| Supersedes 12/1/95 | |

## CAST IRON IMPELLER — B10GRMBMS

## Flanged Case — Mechanical Seal Construction

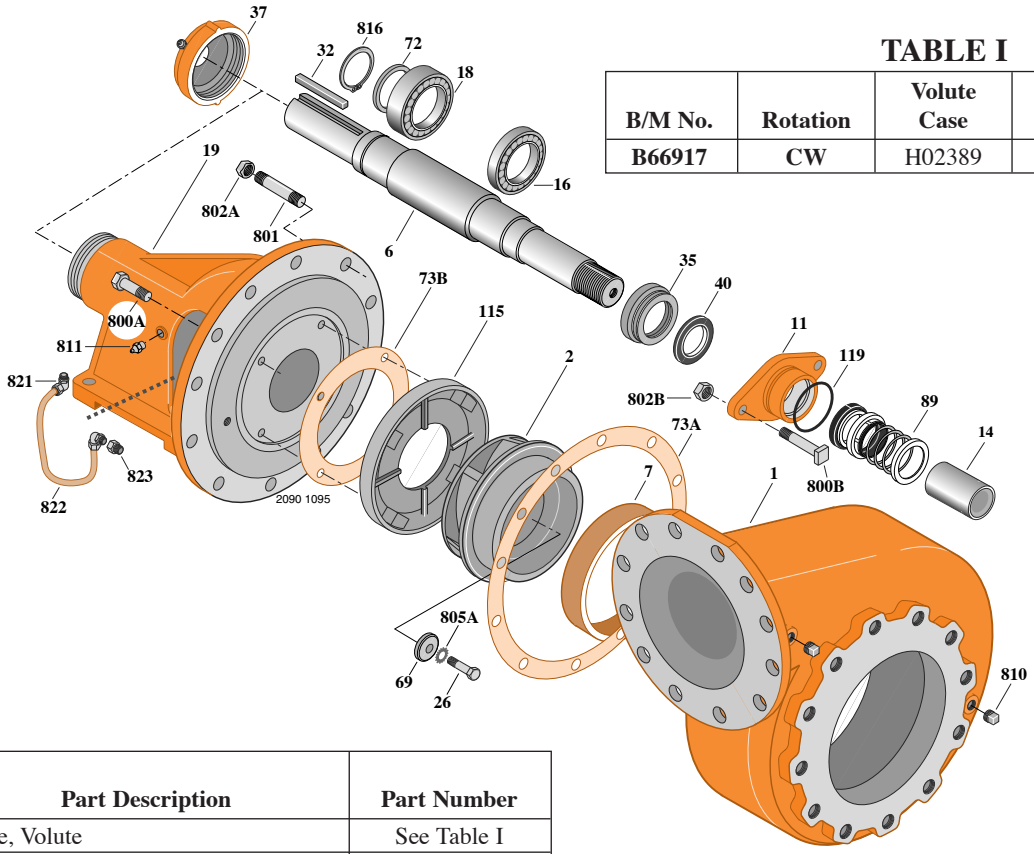


### TABLE I

| B/M No. | Rotation | Volute Case | Impeller | Impeller Diameter |
|---|---|---|---|---|
| B66917 | CW | H02389 | L04063 | 12.12" |

| Item No. | Part Description | Part Number |
|---|---|---|
| 1 | Case, Volute | See Table I |
| 2 | Impeller | See Table I |
| 6 | Shaft (Not sold separately) | See Note 1 |
| 7 | Ring, Wearing | M00999 |
| 11 | Retainer, Mechanical Shaft Seal | S11452 |
| 14 | Sleeve, Shaft | S05974 |
| 16 | Bearing, Ball | S15604 |
| 18 | Bearing, Ball | S13396 |
| 19 | Frame | H01838 |
| 26 | Screw, Impeller 1/2-13x2-1/2" | S23629 |
| 32 | Key, 1/2x4" | S24214 |
| 35 | Inner Bearing Cap | S05928 |
| 37 | Outer Bearing Cap Assembly* | S35277 |
| 40 | Slinger, Water | S10964 |
| 69 | Washer, Impeller | S06319 |
| 72 | Ring, Thrust | S06519 |
| 73A | Gasket, Volute | S06271 |
| 73B | Gasket, Balance Ring | S09943 |
| 89 | Seal, Mechanical Shaft | S32693 |
| 115 | Ring, Balance | S13592 |
| 119 | O-Ring | S26471 |
| 800A | Capscrew, Hex 3/8-16x1" (4 Req.) | S26826 |

* Includes grease fitting.

| Item No. | Part Description | Part Number |
|---|---|---|
| 800B | Bolt, Sq. Head 1/2-13x2-1/4" (2 Req.) | S23792 |
| 801 | Stud, 5/8-11x2-1/4" (12 Req.) | S24061 |
| 802A | Nut, Hex 5/8-11 (12 Req.) | S23109 |
| 802B | Nut, Hex 1/2-13x7/16" (2 Req.) | S23347 |
| 805A | Washer, Lock | S23038 |
| 810 | Plug, Pipe 1/2 NPT (5 Req.) | S23717 |
| 811 | Fitting, Grease | S23670 |
| 816 | Ring, Retaining | S23016 |
| 821 | Elbow, Comp. Fitting (2 Req.) | S24128 |
| 822 | Tubing, Copper | S20677 |
| 823 | Bushing, Pipe | S24544 |

1. **Shaft Replacement Kit** available for this model. Berkeley part number **B07596**. Pump Shaft sold in shaft replacement kit only.