BALDOR
A MEMBER OF THE ABB GROUP

BALDOR • RELIANCE

Product Information Packet

EFM3313T

10HP,1770RPM,3PH,60HZ,215T,3739M,OPSB,F2

Copyright © All product information within this document is subject to Baldor Electric Company copyright © protection, unless otherwise noted.

Part Detail

Revision:	L	**Status:**	PRD/A	**Change #:**		**Proprietary:**	No
Type:	AC	**Prod. Type:**	3739M	**Elec. Spec:**	37WGT853	**CD Diagram:**	CD0005
Enclosure:	OPSB	**Mfg Plant:**		**Mech. Spec:**	37B106	**Layout:**	37LYB106
Frame:	215T	**Mounting:**	F2	**Poles:**	04	**Created Date:**	
Base:	RG	**Rotation:**	R	**Insulation:**	F	**Eff. Date:**	11-09-2016
Leads:	9#14					**Replaced By:**	
Literature:		**Elec. Diagram:**					

BALDOR
A MEMBER OF THE ABB GROUP

Nameplate NP3553L

CAT.NO.	EFM3313T						
SPEC.	37B106T853E7						
HP	10						
VOLTS	230/460						
AMP	25/12.5						
RPM	1770						
FRAME	215T	HZ	60			PH	3
SER.F.	1.15	CODE	H	DES	B	CL	F
NEMA-NOM-EFF	91.7	PF	82				
RATING	40C AMB-CONT						
CC	010A	USABLE AT 208V	26				
DE	6307	ODE	6206				
ENCL	OPSB	SN					

VPWM INVERTER READY
CT30-60(2:1) VT3-60(20:1)

BALDOR
A MEMBER OF THE ABB GROUP

Parts List

Part Number	Description	Quantity
SA125867	SA 37B106T853E7	1.000 EA
RA116210	RA 37B106T853E7	1.000 EA
HA6361A01	LIFTING LUG FOR 37, 39 & 40 FRAME ZINC	2.000 EA
37CB3006	37 CB CASTING W/1.38 LEAD HOLE @ 6:00	1.000 EA
51XW2520A10	.25-20 X .62, TAPTITE II, HEX WSHR SLTD	2.000 EA
11XW1032G06	10-32 X .38, TAPTITE II, HEX WSHR SLTD U	1.000 EA
37EP3200A01SP	FR ENDPLATE, FOR ROUTING PURPOSES	1.000 EA
HW4500A01	1641B(ALEMITE)400 UNIV, GREASE FITT	1.000 EA
HW5100A06	W2420-025 WVY WSHR (WB)	1.000 EA
37PE3201A01	PU ENDPLATE ASSEMBLY FOR ROUTING	1.000 EA
HW4500A01	1641B(ALEMITE)400 UNIV, GREASE FITT	1.000 EA
XY3118A12	5/16-18 HEX NUT DIRECTIONAL SERRATION	4.000 EA
37CB4516	LIPPED LID FOR 37 FRAME NEC KOBX	1.000 EA
51XW0832A07	8-32 X .44, TAPTITE II, HEX WSHR SLTD SE	4.000 EA
HW2501F21	KEY, 5/16 SQ X 2.375	1.000 EA
HA7000A02	KEY RETAINER RING, 1 1/8 DIA, 1 3/8 DIA	1.000 EA
85XU0407S04	4X1/4 U DRIVE PIN STAINLESS	2.000 EA
LB1115N	LABEL,LIFTING DEVICE (ON ROLLS)	1.000 EA
MJ1000A02	GREASE, POLYREX EM EXXON (USe 4824-15A)	0.050 LB
HA3104A35	THRUBOLT .31-18 X 13.687	4.000 EA
37AD2001A01	BAFFLE PLATE, STAMPED	2.000 EA
MG1000Y03	MUNSELL 2.53Y 6.70/ 4.60, GLOSS 20,	0.025 GA
LC0005E01	CONN.DIA./WARNING LABEL (LC0005/LB1119N)	1.000 EA
NP3553L	ALUM SUPER-E VPWM INVERTER READY UL	1.000 EA

BALDOR
A MEMBER OF THE ABB GROUP

Parts List (continued)

Part Number	Description	Quantity
36PA1001	PKG GRP, PRINT PK1017A06	1.000 EA
MN416A01	TAG-INSTAL-MAINT no wire (1000/bx) 11/14	1.000 EA

BALDOR
A MEMBER OF THE ABB GROUP

Accessories

Part Number	Description	Multiplier
37-1404	C FACE KIT	A8

BALDOR
A MEMBER OF THE ABB GROUP

AC Induction Motor Performance Data

Record # 17599 - Typical performance - not guaranteed values

Winding: 37WGT853-R001	**Type:** 3739M	**Enclosure:** OPSB

Nameplate Data				460 V, 60 Hz: High Voltage Connection	
Rated Output (HP)	10			Full Load Torque	29.7 LB-FT
Volts	230/460			Start Configuration	direct on line
Full Load Amps	25/12.5			Breakdown Torque	86.2 LB-FT
R.P.M.	1765			Pull-up Torque	46.2 LB-FT
Hz	60	Phase	3	Locked-rotor Torque	51.6 LB-FT
NEMA Design Code	B	KVA Code	H	Starting Current	88.3 A
Service Factor (S.F.)	1.15			No-load Current	5.51 A
NEMA Nom. Eff.	91.7	Power Factor	82	Line-line Res. @ 25ºC	1.18 Ω
Rating - Duty	40C AMB-CONT			Temp. Rise @ Rated Load	34°C
S.F. Amps				Temp. Rise @ S.F. Load	42°C

Load Characteristics 460 V, 60 Hz, 10 HP

% of Rated Load	25	50	75	100	125	150	S.F.
Power Factor	44	66	77	82	84	85	83
Efficiency	87.6	91.6	92.3	91.9	91	89.8	91.4
Speed	1793	1785	1777	1769	1759	1749	1763
Line amperes	6.15	7.79	9.93	12.5	15.3	18.5	14.2

BALDOR A MEMBER OF THE ABB GROUP

Performance Graph at 460V, 60Hz, 10.0HP Typical performance - Not guaranteed values

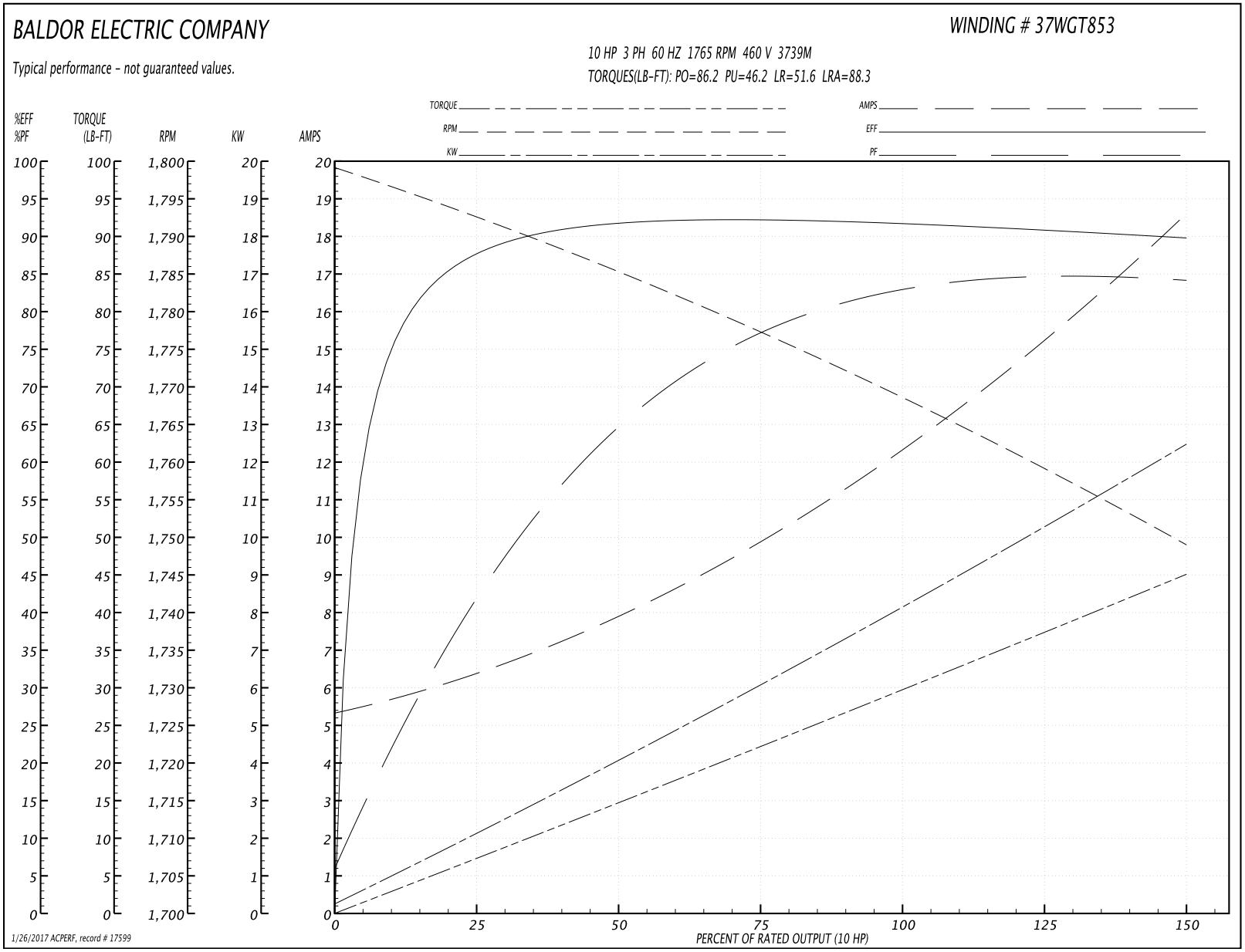

BALDOR A MEMBER OF THE ABB GROUP

37LYB106

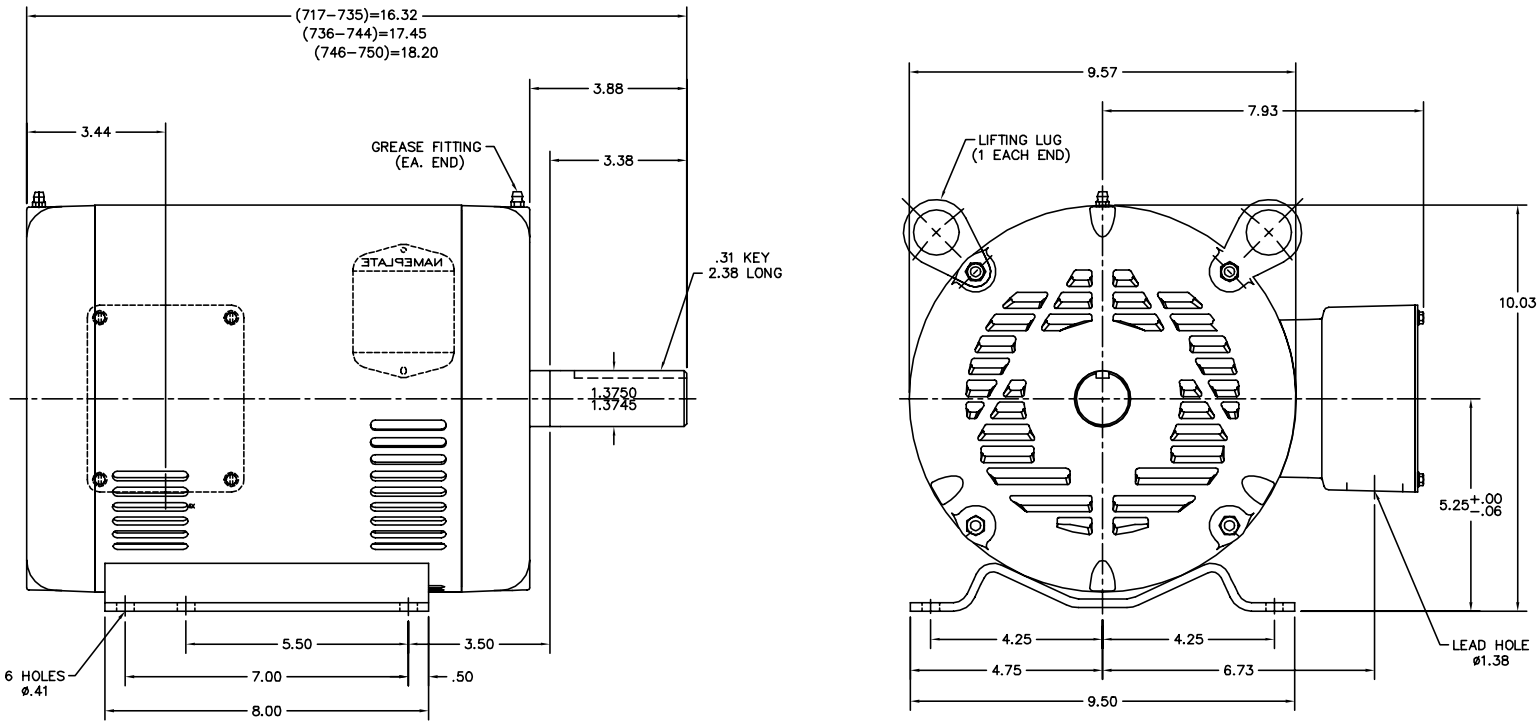

CUSTOMER IS RESPONSIBLE FOR DETERMINING THAT MOTOR PERFORMANCE IS SUITABLE IN THE APPLICATION.

REV. DESC: ADDED 3.44 DIM FOR KO BOX LOCATION				BALDOR ELECTRIC Co.
REV. LTR: F	BY: SSS	REVISED: 15:26:00 05/28/2003	TDR: 303668	
FILE: AAA00009740			REF: 37LYB106	STD HORZ 213–5T OPSB 37M (F–2 MTG)
MTL: –				

37LYB106

BALDOR
A MEMBER OF THE ABB GROUP

CD0005

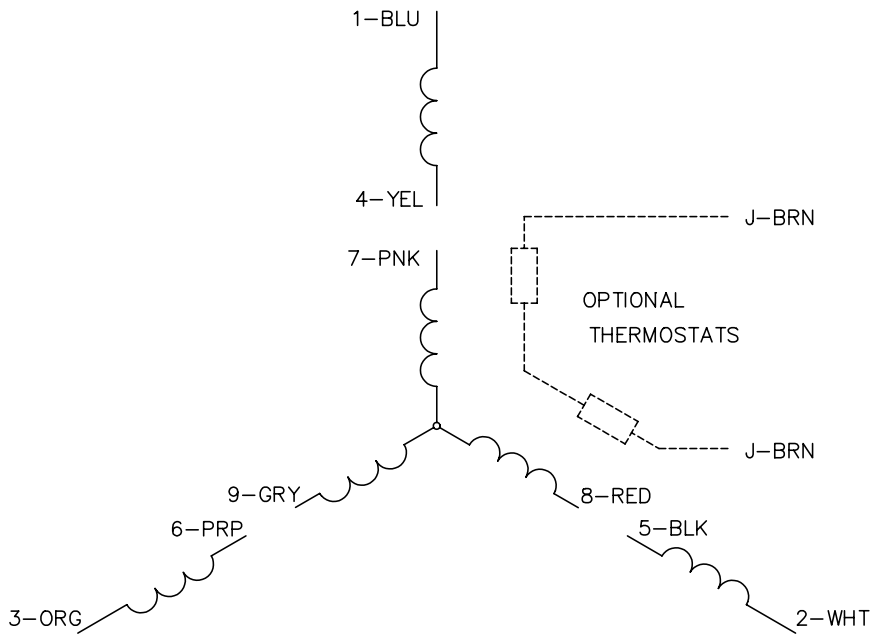

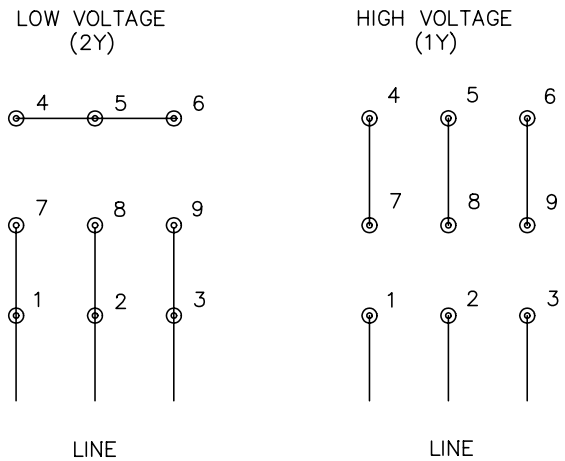

NOTES:

1. INTERCHANGE ANY TWO LINE LEADS TO REVERSE ROTATION.
2. OPTIONAL THERMOSTATS ARE PROVIDED WHEN SPECIFIED.
3. ACTUAL NUMBER OF INTERNAL PARALLEL CIRCUITS MAY BE A MULTIPLE OF THOSE SHOWN ABOVE.
4. LEAD COLORS ARE OPTIONAL. LEADS MUST ALWAYS BE NUMBERED AS SHOWN.

REV. DESC: REVISE TO SHOW OPTIONAL COLORS			
REV. LTR: E	BY: JLP	REVISED: 01/19/99 10:15	TDR: 0171435
CD0005		FILE: AAA00005140	MDL: –
		MTL: –	

BALDOR ELECTRIC Co.

3PH, DV, 9 LEADS

CD0005

BALDOR
A MEMBER OF THE ABB GROUP