BALDOR
A MEMBER OF THE ABB GROUP

BALDOR • RELIANCE

Product Information Packet

CJM3115

1HP,3450RPM,3PH,60HZ,56J,3420M,OPEN,F1

Copyright © All product information within this document is subject to Baldor Electric Company copyright © protection, unless otherwise noted.

Part Detail

Revision:	U	**Status:**	PRD/A	**Change #:**		**Proprietary:**	No
Type:	AC	**Prod. Type:**	3420M	**Elec. Spec:**	34WG3226	**CD Diagram:**	CD0005
Enclosure:	OPEN	**Mfg Plant:**		**Mech. Spec:**	34F029	**Layout:**	34LYF029
Frame:	56J	**Mounting:**	F1	**Poles:**	02	**Created Date:**	
Base:	RG	**Rotation:**	R	**Insulation:**	B	**Eff. Date:**	03-15-2016
Leads:	9#18					**Replaced By:**	
Literature:		**Elec. Diagram:**					

BALDOR
A MEMBER OF THE ABB GROUP

Nameplate NP1256L

CAT.NO.	CJM3115						
SPEC.	34F29-3226						
HP	1						
VOLTS	230/460						
AMP	3.2/1.6						
RPM	3450						
FRAME	56J	HZ	60			PH	3
SER.F.	1.40	CODE	L	DES	B	CLASS	B
NEMA-NOM-EFF	77	PF	82				
RATING	40C AMB-CONT						
CC		USABLE AT 208V	4.2				
DE	6203	ODE	6203				
ENCL	OPEN	SN					
	SFA 4/2						

BALDOR A MEMBER OF THE ABB GROUP

Parts List

Part Number	Description	Quantity
SA005840	SA 34F29-3226	1.000 EA
RA002586	RA 34F29-3226	1.000 EA
NS2512A01	INSULATOR, CONDUIT BOX X	1.000 EA
34CB3002A	CB CAST W/.88 DIA HOLE	1.000 EA
51XB1016A07	10-16 X 7/16 HXWSSLD SERTYB	2.000 EA
11XW1032G06	10-32 X .38, TAPTITE II, HEX WSHR SLTD U	1.000 EA
34EP3212A03	FR EP 34L FOR DRIP CVR	1.000 EA
HW5100A03SP	WAVY WASHER (W1543-017)	1.000 EA
34EP3401A01SP	PU ENDPLATE, MACH	1.000 EA
34AD2000	BAFFLE PLATE, STAMPED	1.000 EA
51XT0632A06	6-32X3/8 TY23 HXWS SLDSR	4.000 EA
51XN1032A20	10-32 X 1 1/4 HX WS SL SR	2.000 EA
34FH4000A15	DRIP COVER, STAMPED,PRIMER	1.000 EA
51XW1032A06	10-32 X .38, TAPTITE II, HEX WSHR SLTD S	3.000 EA
WD4101A09	STIMPSON D3560, .875 DIA. HOLE PLUG	1.000 EA
34CB4517	CB LID 4 MTG HOLES .22 DIA STAMPED, FOR	1.000 EA
51XW0832A07	8-32 X .44, TAPTITE II, HEX WSHR SLTD SE	4.000 EA
RM1010A01	35-968-1 VINYL CLS	1.000 EA
MG1000G27	MED CHARCOAL METALLIC GREY 400-0096	0.014 GA
10XF0440S02	04-40 X 1/8 TYPE F HEX HD STAINLESS STIC	2.000 EA
HA3100A14	THRUBOLT 10-32 X 7.875	4.000 EA
LC0005E01	CONN.DIA./WARNING LABEL (LC0005/LB1119N)	1.000 EA
NP1256L	ALUM UL CSA CC	1.000 EA
35PA1000	PKG GRP, PRINT PK1008A06	1.000 EA

BALDOR
A MEMBER OF THE ABB GROUP

AC Induction Motor Performance Data

Record # 23510 - Typical performance - not guaranteed values

Winding: 34WG3226-R001	**Type:** 3420M	**Enclosure:** TEFC

Nameplate Data				460 V, 60 Hz: High Voltage Connection	
Rated Output (HP)	1			Full Load Torque	1.51 LB-FT
Volts	230/460			Start Configuration	direct on line
Full Load Amps	3.2/1.6			Breakdown Torque	7.966 LB-FT
R.P.M.	3450			Pull-up Torque	6.2 LB-FT
Hz	60	Phase	3	Locked-rotor Torque	8.7 LB-FT
NEMA Design Code	B	KVA Code	L	Starting Current	14.5 A
Service Factor (S.F.)	1.4			No-load Current	0.913 A
NEMA Nom. Eff.	77	Power Factor	82	Line-line Res. @ 25ºC	13.6 Ω
Rating - Duty	40C AMB-CONT			Temp. Rise @ Rated Load	55°C
S.F. Amps	4/2			Temp. Rise @ S.F. Load	74°C

Load Characteristics 460 V, 60 Hz, 1 HP

% of Rated Load	25	50	75	100	125	150	S.F.
Power Factor	41	59	72	80	85	89	87
Efficiency	57.7	71.5	77.1	79.3	79.9	79.7	79.8
Speed	3560	3536	3506	3475	3445	3406	3422
Line amperes	0.967	1.09	1.27	1.47	1.7	1.99	1.87

BALDOR A MEMBER OF THE ABB GROUP

Performance Graph at 460V, 60Hz, 1.0HP Typical performance - Not guaranteed values

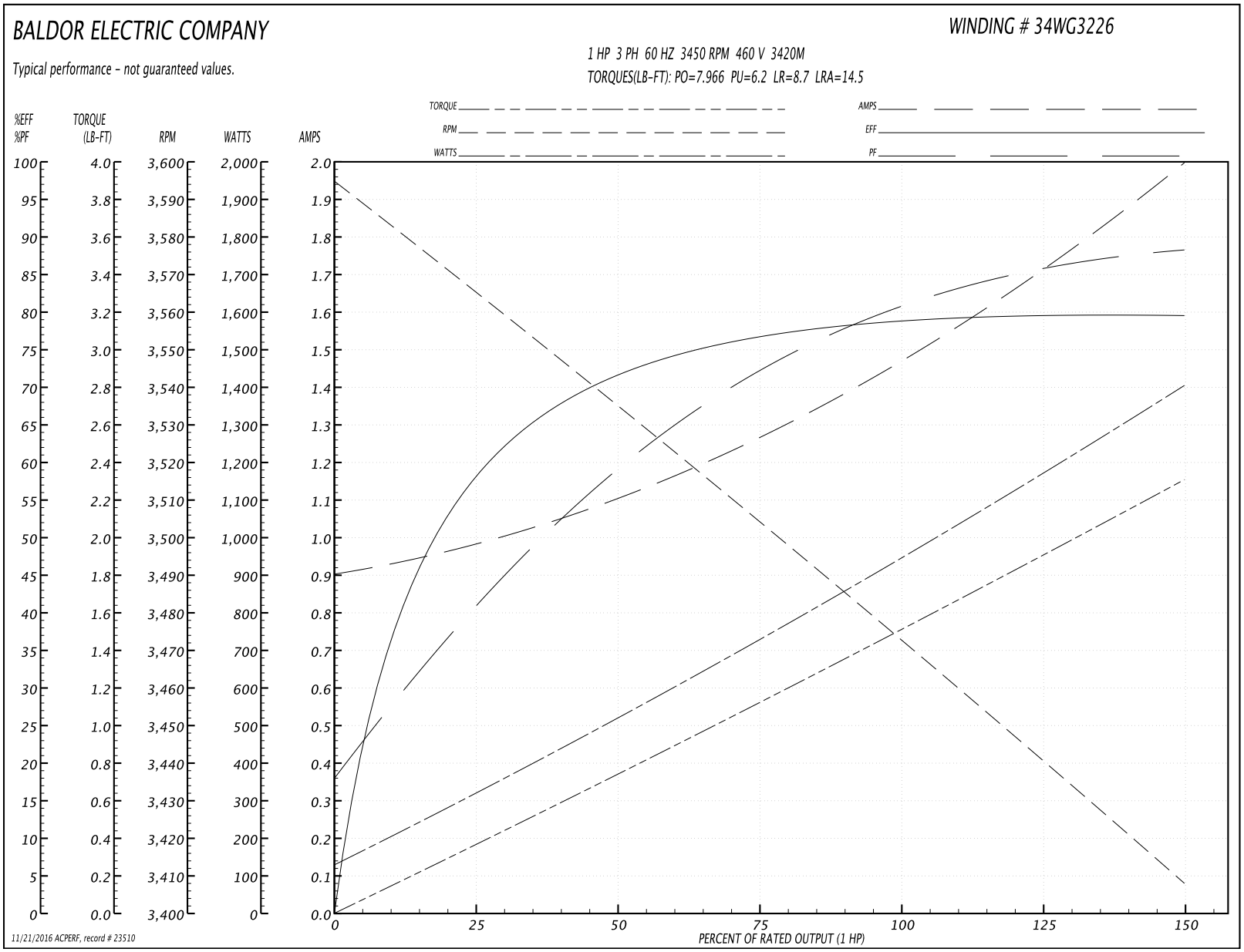

BALDOR
A MEMBER OF THE ABB GROUP

34LYF029

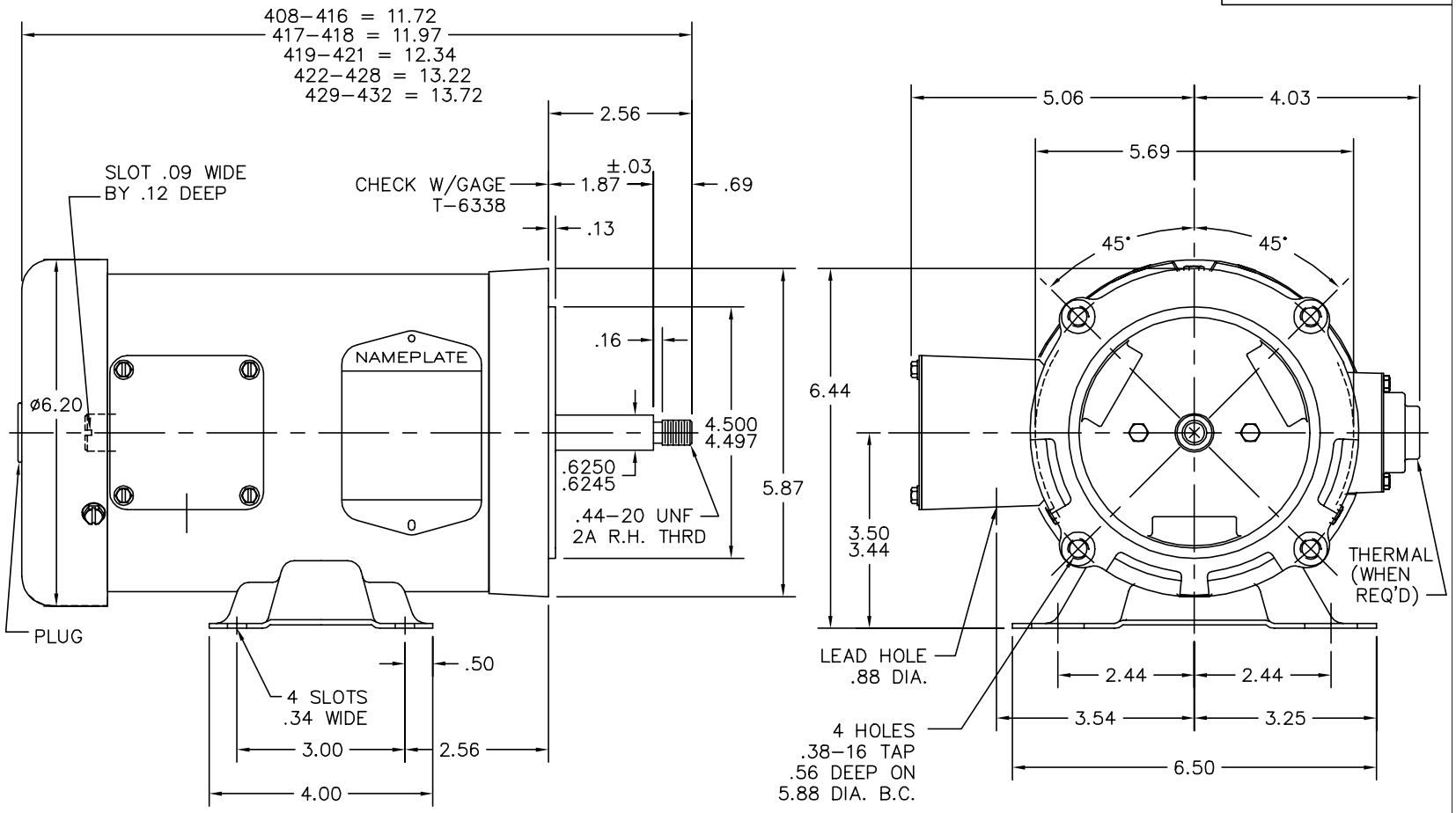

CUSTOMER IS RESPONSIBLE FOR DETERMINING THAT MOTOR PERFORMANCE IS SUITABLE IN THE APPLICATION.

REV. DESC: NEW KBOX & LID				BALDOR ELECTRIC Co.
REV. LTR: K	BY: RT	REVISED: 16:29:47 10/28/2003	TDR: 314971	
34LYF029		FILE: AAA00026300	REF: 34LYF029	STD HOR 56J OPEN 34M W/DRIP CVR
		MTL: –		

34LYF029

BALDOR A MEMBER OF THE ABB GROUP

CD0005

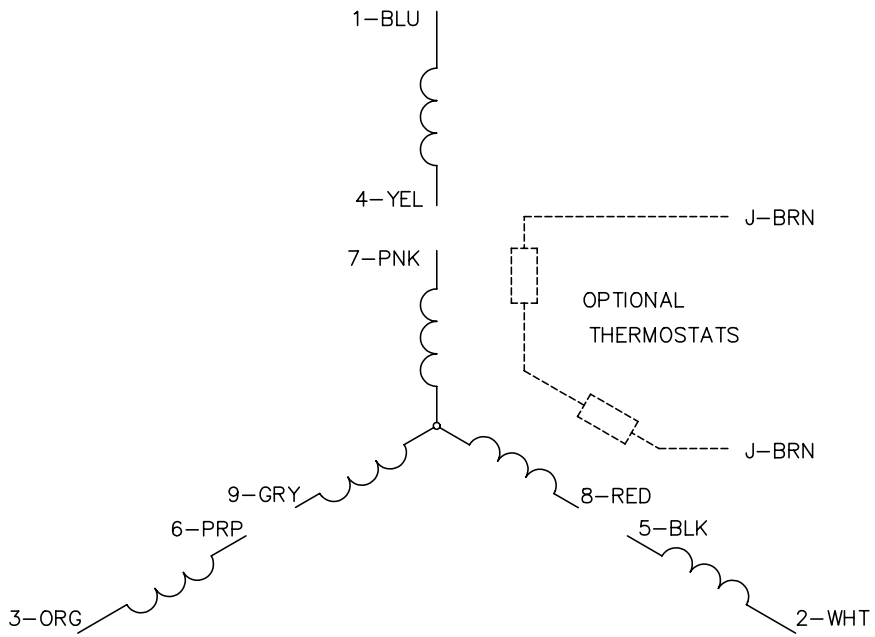

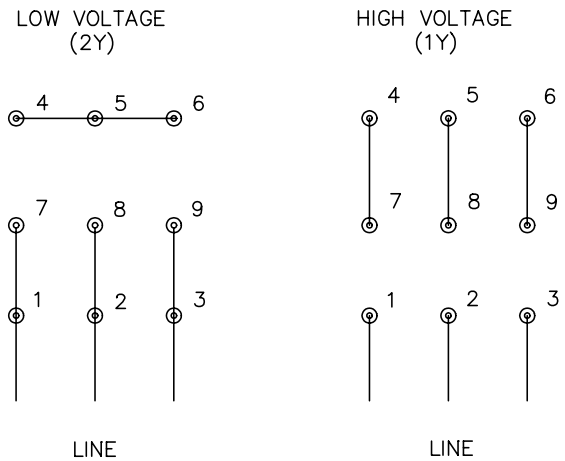

NOTES:

1. INTERCHANGE ANY TWO LINE LEADS TO REVERSE ROTATION.
2. OPTIONAL THERMOSTATS ARE PROVIDED WHEN SPECIFIED.
3. ACTUAL NUMBER OF INTERNAL PARALLEL CIRCUITS MAY BE A MULTIPLE OF THOSE SHOWN ABOVE.
4. LEAD COLORS ARE OPTIONAL. LEADS MUST ALWAYS BE NUMBERED AS SHOWN.

REV. DESC: REVISE TO SHOW OPTIONAL COLORS			
REV. LTR: E	BY: JLP	REVISED: 01/19/99 10:15	TDR: 0171435
CD0005		FILE: AAA00005140	MDL: –
		MTL: –	

BALDOR ELECTRIC Co.

3PH, DV, 9 LEADS

CD0005

BALDOR
A MEMBER OF THE ABB GROUP