BALDOR
A MEMBER OF THE ABB GROUP

BALDOR • RELIANCE

Product Information Packet

M7007A

.5HP,1140RPM,3PH,60HZ,56,X3516M,XPFC,F1

Copyright © All product information within this document is subject to Baldor Electric Company copyright © protection, unless otherwise noted.

Part Detail

Revision:	AK	**Status:**	PRD/A	**Change #:**		**Proprietary:**	No
Type:	AC	**Prod. Type:**	3516M	**Elec. Spec:**	35WGZ007	**CD Diagram:**	CD0007
Enclosure:	XPFC	**Mfg Plant:**		**Mech. Spec:**	35E354	**Layout:**	35LYE354
Frame:	56	**Mounting:**	F1	**Poles:**	06	**Created Date:**	
Base:	RG	**Rotation:**	R	**Insulation:**	B	**Eff. Date:**	09-08-2015
Leads:	12#18					**Replaced By:**	
Literature:		**Elec. Diagram:**					

BALDOR
A MEMBER OF THE ABB GROUP

Nameplate NP0016XPSL

NO.		CC	
SER.			
SPEC.	35E354Z07		
CAT.NO.	M7007A		
HP	.5	T. CODE	T4
VOLTS	208-230/460		
AMPS	2.5-2.4/1.2		
RPM	1140		
HZ	60	PH	3
		CL	B
SER.F.	1.00	DES	B
		CODE	L
RATING	40C AMB-CONT		
FRAME	56	NEMA-NOM-EFF	70
USABLE AT 208V	2.5	PF	55
BLANK			

BALDOR
A MEMBER OF THE ABB GROUP

Parts List

Part Number	Description	Quantity
SA023896	SA 35E354Z07	1.000 EA
RA019946	RA 35E354Z07	1.000 EA
TPMYJ72KX	THERMAL 3PH 0.75 AUT 120C	1.000 EA
35CB3001A01SP	EXPL CONDUIT BOX, MACH, 1/2" PIPE TAP LE	1.000 EA
11XW1032G06	10-32 X .38, TAPTITE II, HEX WSHR SLTD U	1.000 EA
HW3001B01	BRASS CUP WASHER, FOR #8 SCREW	1.000 EA
35EP3700A01SP	FR ENDPLATE, XPFC	1.000 EA
HW5100A03SP	WAVY WASHER (W1543-017)	1.000 EA
35EP3701A01	PU ENDPLATE, XPFC - 205 BRG	1.000 EA
XY3118A12	5/16-18 HEX NUT DIRECTIONAL SERRATION	4.000 EA
35FN3002A05	EXFN, PLASTIC, 6.376 OD, .638 ID	1.000 EA
HA6001A01	THERMAL RETAINER (PLATED)	1.000 EA
51XB1214A16	12-14X1.00 HXWSSLD SERTYB	1.000 EA
51XW1032A06	10-32 X .38, TAPTITE II, HEX WSHR SLTD S	3.000 EA
35CB3500A01SP	CONDUIT BOX LID, MACH	1.000 EA
51XN2520A16	SCREW, HEX WS SLT, ZN, 1/4-20 X 1.00	4.000 EA
HW2501D13	KEY, 3/16 SQ X 1.375	1.000 EA
HA7000A04	KEY RETAINER 0.625 DIA SHAFTS	1.000 EA
85XU0407S04	4X1/4 U DRIVE PIN STAINLESS	6.000 EA
MJ1000A02	GREASE, POLYREX EM EXXON (USe 4824-15A)	0.050 LB
35FH4005A01SP	IEC FH NO GREASER W/PRIMED	1.000 EA
MG1025G29	WILKOFAST, 789.229, DARK CHARCOAL GRAY	0.017 GA
NP0018F	ALUM UL XP CONDUIT BOX NAMEPLATE	1.000 EA
12XF0632A06	6-32X3/8 TY F HEX HD SLT	2.000 EA

BALDOR
A MEMBER OF THE ABB GROUP

Parts List (continued)

Part Number	Description	Quantity
NS2500A06	INSULATOR,AUTO THER PROT,W/PSA ON 1 SIDE	1.000 EA
HA3104A06	THRUBOLT 5/16-18 X 8.50 OHIO ROD	4.000 EA
LB1118	LABEL,WARNING (ROLL LABEL)	1.000 EA
LC0007	CONNECTION LABEL	1.000 EA
NP0016XPSL	SS XP UL CSA CC CL-I GP-D CL-II GP-F&G	1.000 EA
36PA1000	PKG GRP, PRINT PK1016A06	1.000 EA
MN416A01	TAG-INSTAL-MAINT no wire (1200/bx) 11/14	1.000 EA

BALDOR
A MEMBER OF THE ABB GROUP

AC Induction Motor Performance Data

Record # 16919 - Typical performance - not guaranteed values

Winding: 35WGZ007-R002	**Type:** 3516M	**Enclosure:** XPFC

Nameplate Data				460 V, 60 Hz: High Voltage Connection	
Rated Output (HP)	.5			Full Load Torque	2.25 LB-FT
Volts	208-230/460			Start Configuration	direct on line
Full Load Amps	2.5-2.4/1.2			Breakdown Torque	9.6 LB-FT
R.P.M.	1140			Pull-up Torque	6.9 LB-FT
Hz	60	Phase	3	Locked-rotor Torque	7.1 LB-FT
NEMA Design Code	B	KVA Code	L	Starting Current	5.8 A
Service Factor (S.F.)	1			No-load Current	1.05 A
NEMA Nom. Eff.	70	Power Factor	55	Line-line Res. @ 25ºC	37.1 Ω
Rating - Duty	40C AMB-CONT			Temp. Rise @ Rated Load	47°C
				Locked-rotor Power Factor	71
				Rotor inertia	0.0949 LB-FT2

Load Characteristics 460 V, 60 Hz, 0.5 HP

% of Rated Load	25	50	75	100	125	150
Power Factor	25	37	47	56	63	68
Efficiency	39	57	64	68	69	69
Speed	1190	1181	1170	1160	1149	1137
Line amperes	1.05	1.1	1.15	1.25	1.35	1.45

BALDOR A MEMBER OF THE ABB GROUP

Performance Graph at 460V, 60Hz, 0.5HP Typical performance - Not guaranteed values

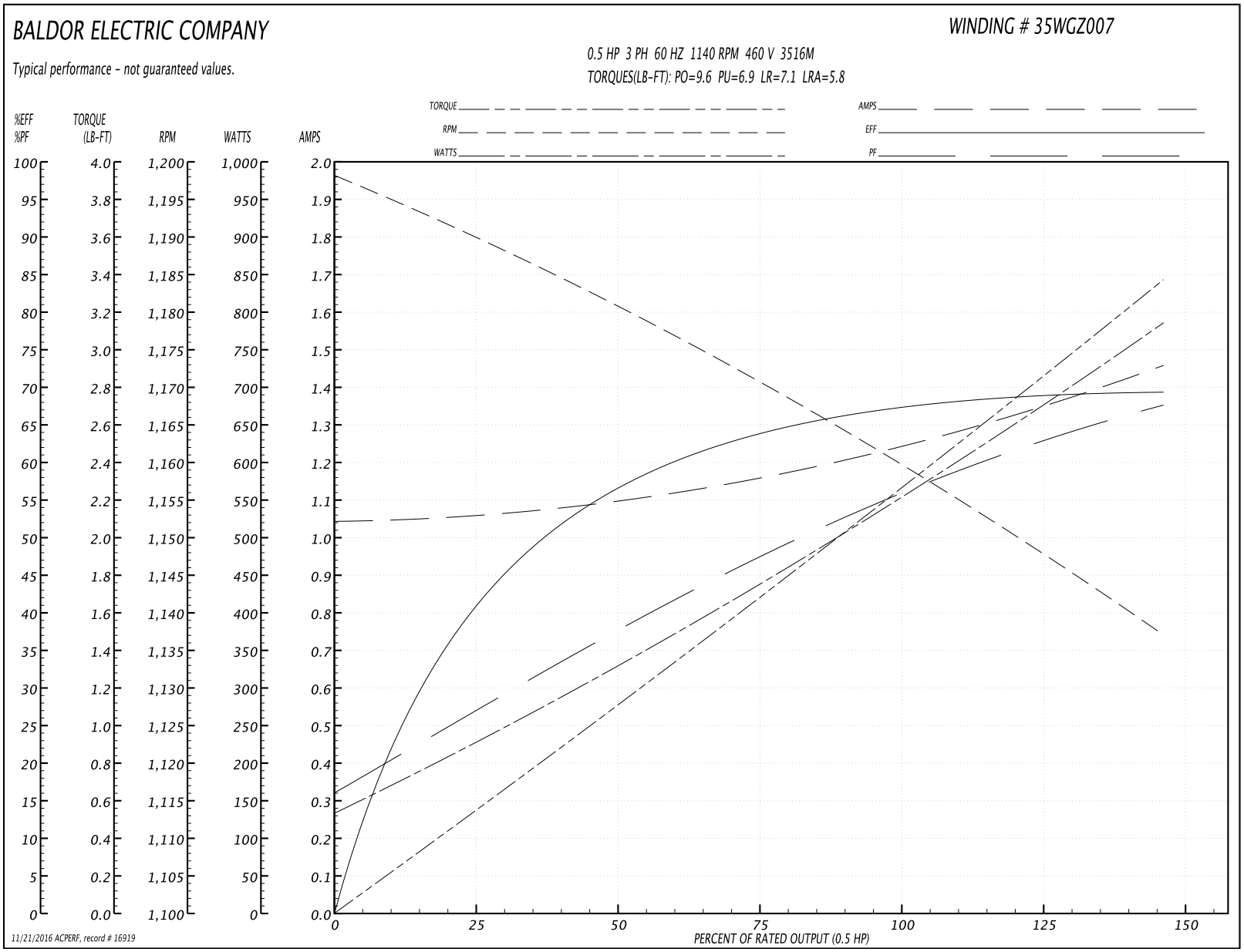

BALDOR A MEMBER OF THE ABB GROUP

35LYE354

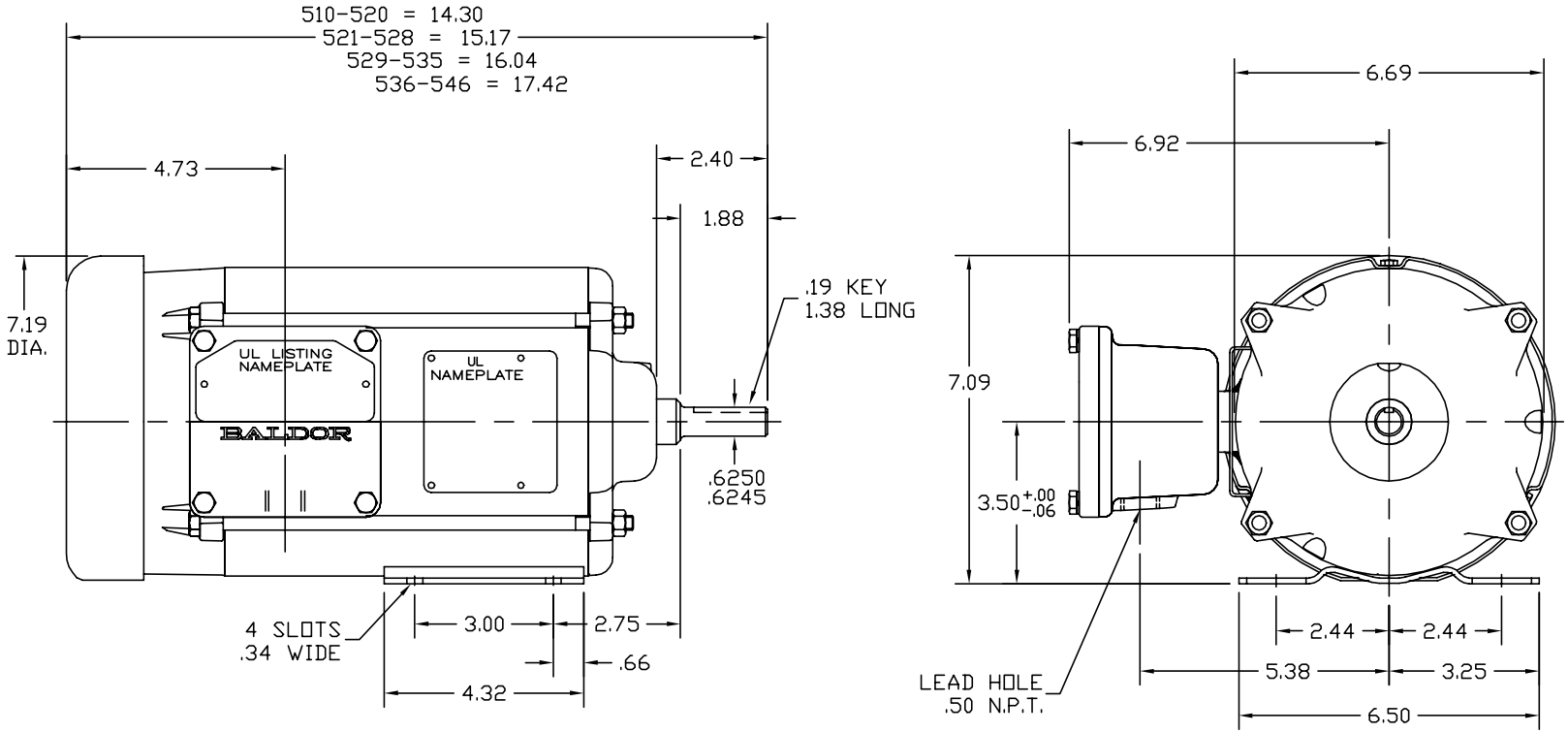

CUSTOMER IS RESPONSIBLE FOR DETERMINING THAT MOTOR PERFORMANCE IS SUITABLE IN THE APPLICATION.

REV. DESC: CORRECT DESCRIPTION			BALDOR ELECTRIC Co.
REV. LTR: E	VERSION: 01	TDR: 000000428248	
35LYE354	FILE: \AAA\00005\334	REVISED: 09:22:55 04/13/2007	STD HORZ 56 XPFC X35M CL I-GP D-CL II-GP F&G
	MTL: -	BY: ENBRAMO	

35LYE354

BALDOR A MEMBER OF THE ABB GROUP

CD0007

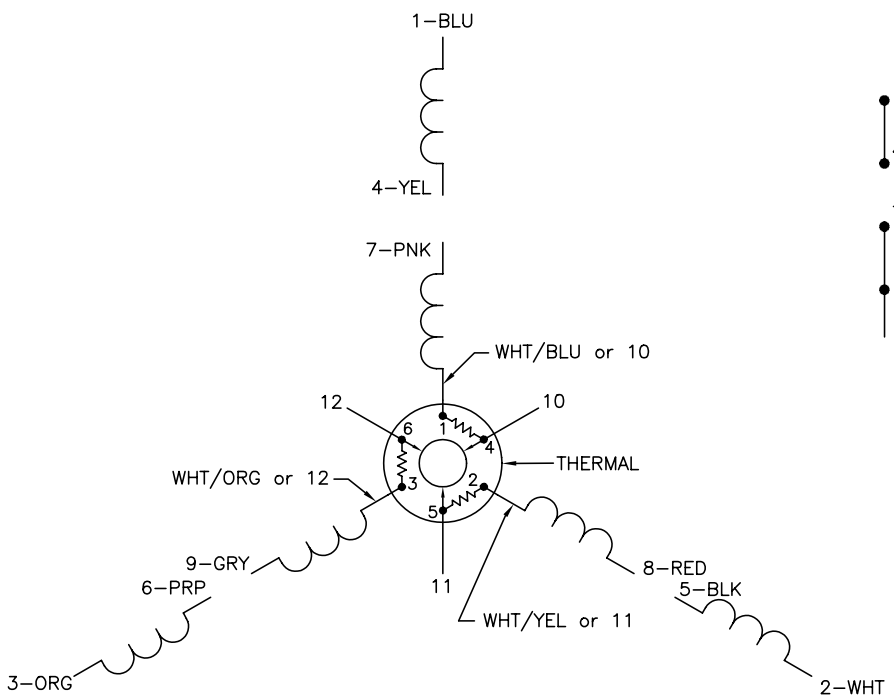

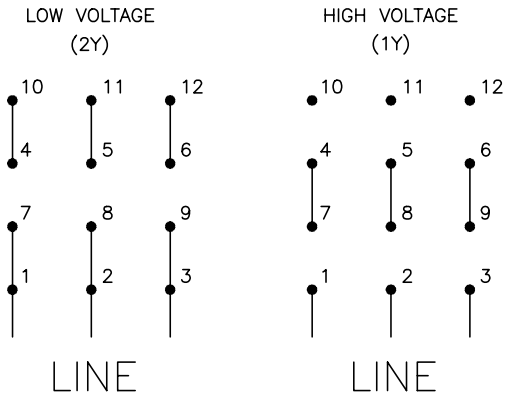

NOTES:

1. INTERCHANGE ANY TWO LINE LEADS TO REVERSE ROTATION.
2. ACTUAL NUMBER OF INTERNAL PARALLEL CIRCUITS MAY VARY.
3. LEAD COLORS ARE OPTIONAL. LEADS MUST ALWAYS BE NUMBERED AS SHOWN.

REV. DESC: ADDED "CK" PLANT CODE			
REV. LTR: E	BY: EAH	REVISED: 05/06/99 17:1	TDR: 0181040
CD0007		FILE: AAA00008370	MDL: –
		MTL: –	

BALDOR ELECTRIC Co.

3PH, DV, THERMAL, 12 LEADS

CD0007

BALDOR A MEMBER OF THE ABB GROUP