BALDOR
A MEMBER OF THE ABB GROUP

BALDOR • RELIANCE

Product Information Packet

EM3120T-G

1.5HP,3490RPM,3PH,60HZ,143T,3518M,OPSB,F

Copyright © All product information within this document is subject to Baldor Electric Company copyright © protection, unless otherwise noted.

Part Detail

Revision:	G	**Status:**	PRD/A	**Change #:**		**Proprietary:**	No
Type:	AC	**Prod. Type:**	3518M	**Elec. Spec:**	35WGM761	**CD Diagram:**	CD0005
Enclosure:	OPSB	**Mfg Plant:**		**Mech. Spec:**	35Z948	**Layout:**	35LYZ948
Frame:	143T	**Mounting:**	F1	**Poles:**	02	**Created Date:**	11-17-2011
Base:	RG	**Rotation:**	R	**Insulation:**	H	**Eff. Date:**	01-23-2017
Leads:	9#18					**Replaced By:**	
Literature:		**Elec. Diagram:**					

BALDOR
A MEMBER OF THE ABB GROUP

Nameplate NP1259L

CAT.NO.	EM3120T-G								
SPEC.	35Z948M761G1								
HP	1.5								
VOLTS	230/460								
AMP	4/2								
RPM	3490								
FRAME	143T	HZ	60					PH	3
SER.F.	1.15	CODE	L	DES	B	CL	H		
NEMA-NOM-EFF	84	PF	83						
RATING	40C AMB-CONT								
CC	010A	USABLE AT 208V	4.2						
DE	6205	ODE	6203						
ENCL	OPSB	SN							

BALDOR
A MEMBER OF THE ABB GROUP

Parts List

Part Number	Description	Quantity
SA234356	SA 35Z948M761G1	1.000 EA
RA221329	RA 35Z948M761G1	1.000 EA
S/P107-000-001	SUPER E PROC'S-FS, WS & CK PLTS	1.000 EA
NS2512A01	INSULATOR, CONDUIT BOX X	1.000 EA
35CB3009	35 CB W/1.09 DIA. LEAD HOLE @ 6:	1.000 EA
51XB1016A07	10-16 X 7/16 HXWSSLD SERTYB	2.000 EA
11XW1032G06	10-32 X .38, TAPTITE II, HEX WSHR SLTD U	1.000 EA
35EP3201A03	STD FR EP OPEN-203BRG-35L OR M FRAME--LE	1.000 EA
HW5100A03SP	WAVY WASHER (W1543-017)	1.000 EA
BP5308A01	AEGIS SH GRD ASSY W/RETAINER RING	1.000 EA
35EP3200A31	PU ENDPLATE, MACH	1.000 EA
51XN1032A18	10-32 X 1 1/8 HX WS SL SR (ESKAY)	2.000 EA
XY1032A02	10-32 HEX NUT DIRECTIONAL SERRATION	4.000 EA
35CB4521	35 LIPPED CB LID (GALV & PHOSPH)	1.000 EA
51XW0832A07	8-32 X .44, TAPTITE II, HEX WSHR SLTD SE	4.000 EA
HW2501D13	KEY, 3/16 SQ X 1.375	1.000 EA
HA7000A01	KEY RETAINER 7/8" DIA SHAFT	1.000 EA
85XU0407S04	4X1/4 U DRIVE PIN STAINLESS	2.000 EA
LB1459	AEGIS SGR LABEL "AEGISLBL-100"	1.000 EA
MJ1000A02	GREASE, POLYREX EM EXXON (USe 4824-15A)	0.050 LB
HA3100A15	THRUBOLT 10-32 X 8.375	4.000 EA
35AD2005A01	BAFFLE PLATE,MOD 35-SLTD BAND MTRS GL.F.	2.000 EA
MG1000Y03	MUNSELL 2.53Y 6.70/ 4.60, GLOSS 20,	0.017 GA
LC0005E01	CONN.DIA./WARNING LABEL (LC0005/LB1119N)	1.000 EA

BALDOR
A MEMBER OF THE ABB GROUP

Parts List (continued)

Part Number	Description	Quantity
MN416A01	TAG-INSTAL-MAINT no wire (1000/bx) 11/14	1.000 EA
NP1259L	ALUM SUPER-E UL CSA-EEV CC NEMA PREMIUM	1.000 EA
35PA1000	PKG GRP, PRINT PK1008A06	1.000 EA
LB1350	BAR CODE LABEL FOR YORK	1.000 EA

BALDOR
A MEMBER OF THE ABB GROUP

AC Induction Motor Performance Data

Record # 53128 - Typical performance - not guaranteed values

Winding: 35WGM761-R009	**Type:** 3518M	**Enclosure:** OPSB

Nameplate Data				460 V, 60 Hz: High Voltage Connection	
Rated Output (HP)	1.5			Full Load Torque	2.26 LB-FT
Volts	230/460			Start Configuration	direct on line
Full Load Amps	4/2			Breakdown Torque	9.32 LB-FT
R.P.M.	3490			Pull-up Torque	4.18 LB-FT
Hz	60	Phase	3	Locked-rotor Torque	6.79 LB-FT
NEMA Design Code	B	KVA Code	L	Starting Current	17.2 A
Service Factor (S.F.)	1.15			No-load Current	1.05 A
NEMA Nom. Eff.	84	Power Factor	83	Line-line Res. @ 25ºC	12.7 Ω
Rating - Duty	40C AMB-CONT			Temp. Rise @ Rated Load	24°C
S.F. Amps				Temp. Rise @ S.F. Load	28°C
				Locked-rotor Power Factor	64
				Rotor inertia	0.0493 LB-FT2

Load Characteristics 460 V, 60 Hz, 1.5 HP

% of Rated Load	25	50	75	100	125	150	S.F.
Power Factor	43	64	77	83	87	89	85
Efficiency	73.9	82.4	85.1	85.1	84.3	83.1	84.6
Speed	3574	3550	3524	3496	3465	3430	3477
Line amperes	1.14	1.35	1.63	1.99	2.41	2.84	2.24

BALDOR A MEMBER OF THE ABB GROUP

Performance Graph at 460V, 60Hz, 1.5HP Typical performance - Not guaranteed values

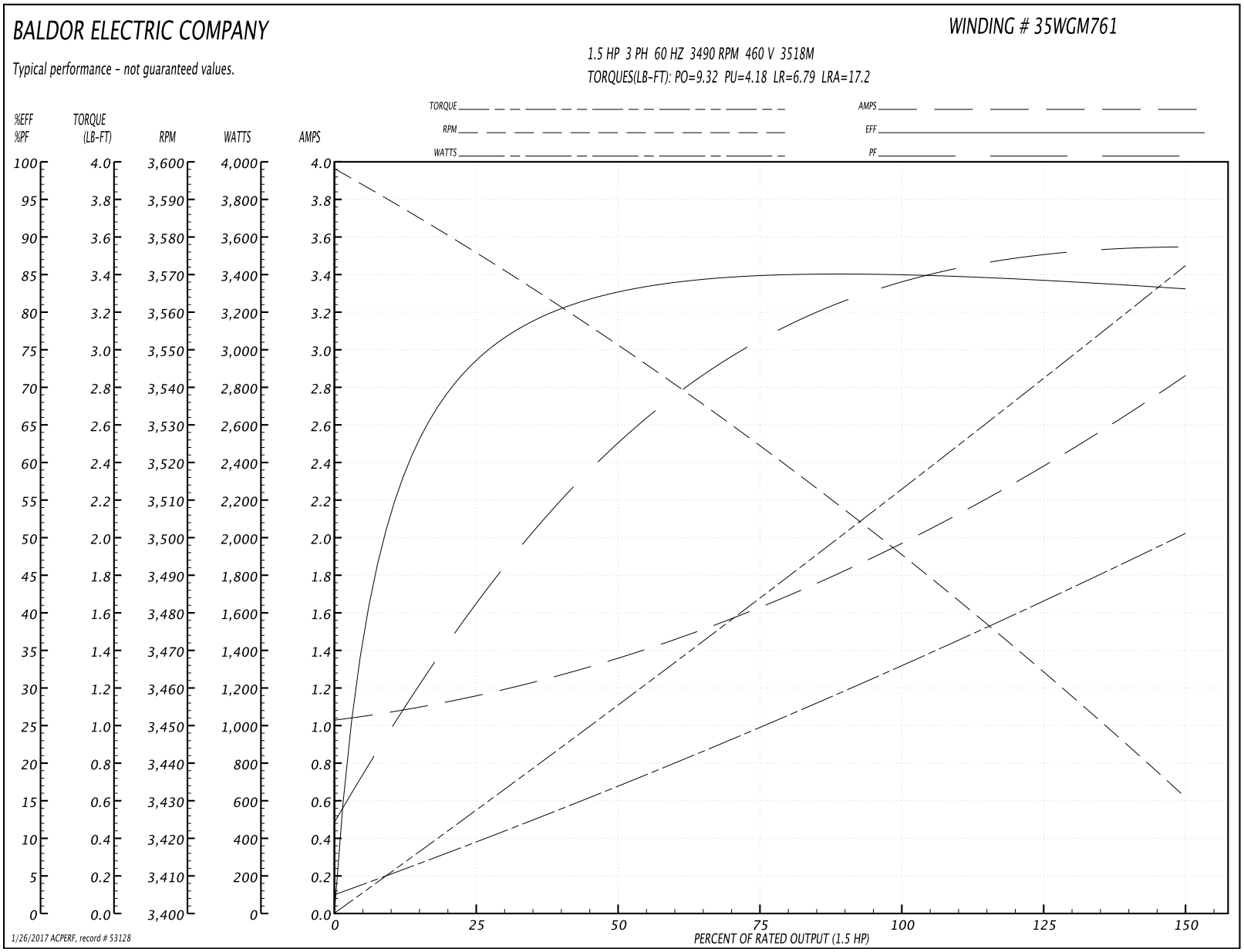

BALDOR
A MEMBER OF THE ABB GROUP

35LYZ948

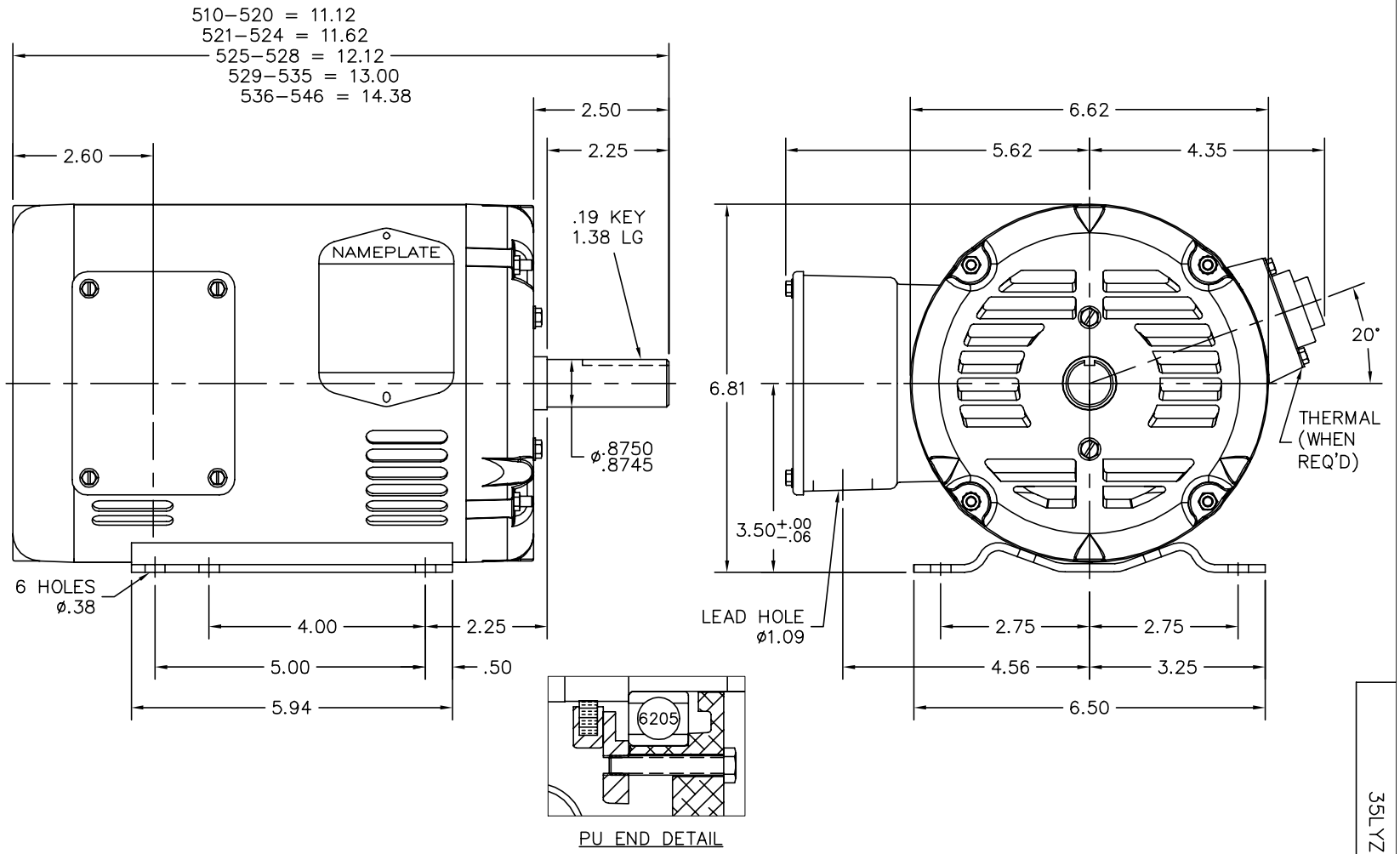

CUSTOMER IS RESPONSIBLE FOR DETERMINING THAT BALDOR'S PRODUCT WILL PERFORM SUITABLY IN THE INTENDED APPLICATION.

REV. DESC: HIDE LINE ON KOBX/KOLD		
REV. LTR: A	VERSION: 01	TDR: 000000949837
FILE: \AAA\00186\945	REVISED: 03:50:28 10/22/2015	BY: ENMAIYO
MTL: –		

BALDOR

HOR 143–5T OPSB M, AEGIS INT SHAFT GRD, "W" BASE

SH 1 of 1

35LYZ948

BALDOR
A MEMBER OF THE ABB GROUP

CD0005

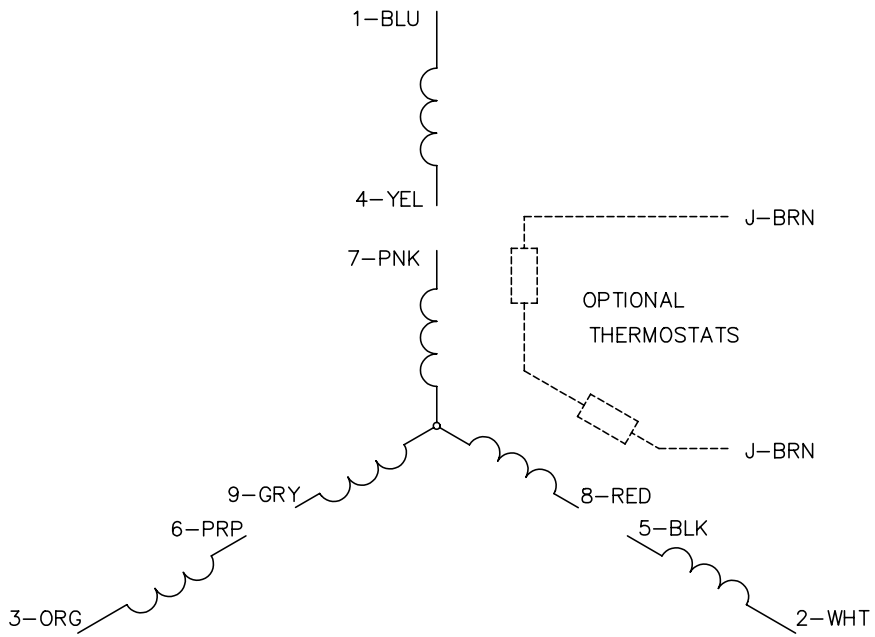

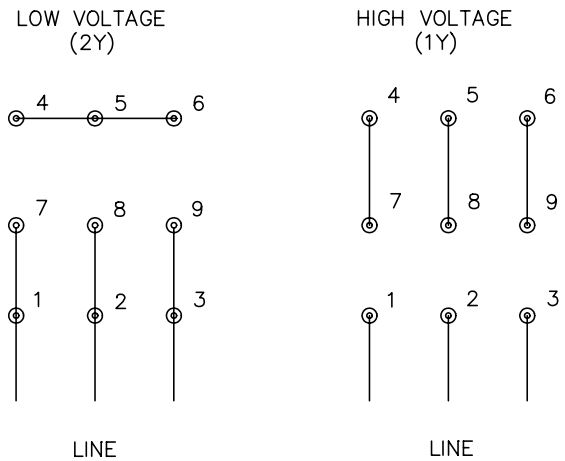

NOTES:

1. INTERCHANGE ANY TWO LINE LEADS TO REVERSE ROTATION.
2. OPTIONAL THERMOSTATS ARE PROVIDED WHEN SPECIFIED.
3. ACTUAL NUMBER OF INTERNAL PARALLEL CIRCUITS MAY BE A MULTIPLE OF THOSE SHOWN ABOVE.
4. LEAD COLORS ARE OPTIONAL. LEADS MUST ALWAYS BE NUMBERED AS SHOWN.

REV. DESC: REVISE TO SHOW OPTIONAL COLORS			
REV. LTR: E	BY: JLP	REVISED: 01/19/99 10:15	TDR: 0171435
CD0005		FILE: AAA00005140	MDL: –
		MTL: –	

BALDOR ELECTRIC Co.

3PH, DV, 9 LEADS

CD0005

BALDOR
A MEMBER OF THE ABB GROUP