BALDOR
A MEMBER OF THE ABB GROUP

BALDOR • RELIANCE

Product Information Packet

EJPM2551T

75HP,1775RPM,3PH,60HZ,365JP,4462M,OPSB,F

Copyright © All product information within this document is subject to Baldor Electric Company copyright © protection, unless otherwise noted.

Part Detail

Revision:	F	**Status:**	PRD/A	**Change #:**		**Proprietary:**	No
Type:	AC	**Prod. Type:**	4462M	**Elec. Spec:**	44WGW013	**CD Diagram:**	CD0180
Enclosure:	OPSB	**Mfg Plant:**		**Mech. Spec:**	44F048	**Layout:**	44LYF048
Frame:	365JP	**Mounting:**	F1	**Poles:**	04	**Created Date:**	06-05-2015
Base:	RG	**Rotation:**	R	**Insulation:**	F	**Eff. Date:**	01-13-2017
Leads:	9#6					**Replaced By:**	
Literature:		**Elec. Diagram:**					

BALDOR
A MEMBER OF THE ABB GROUP

Nameplate NP2138L

CAT.NO.	EJPM2551T			P/N				ENCLOSURE	OPSB		
SPEC.	44F048W013G3	CC	010A	FRAME	365JP			S/N			
HP	75			CLASS	F	HZ	60				
RPM	1775	PH	3	DES	B						
VOLT	230/460					KVA-CODE	F	ODE BRG	6312	DE BRG	6313
AMP	170/85			USABLE AT 208V							
RATING	40C AMB-CONT			GREASE	POLYREX EM						
NEMA-NOM-EFF	95	PF	85	SER.F.	1.15						
HTR-VOLTS		HTR-AMPS				MAX. SPACE HEATER TEMP.					

BALDOR
A MEMBER OF THE ABB GROUP

Parts List

Part Number	Description	Quantity
SA302192	SA 44F048W013G3	1.000 EA
RA289278	RA 44F048W013G3	1.000 EA
S/P107-000-004	SUPER-E(284 FR. & UP)-CL PLANT,POLYREX E	1.000 EA
HA6731	LIFTING LUG FOR 44 FRAME MOTORS.	2.000 EA
HA6616A01	CAST ADAPTOR, 44 FRAME - NEMA 364-5 - MA	1.000 EA
19XW3816A12	.38-16 X .75 HEX WASHER HEAD TAPTITE II	2.000 EA
HW1001A38	LOCKWASHER 3/8, ZINC PLT .688 OD, .382 I	2.000 EA
10CB3002A02	CB 309 3.62 LD HOLE, .38 MTG HOLE & 3.50	1.000 EA
19XW3118A16	.31-18 HEX WASHER HEAD TAPTITE II 1.00 L	4.000 EA
HW1001A31	LOCKWASHER 5/16, ZINC PLT.591 OD, .319 I	4.000 EA
WD1000B16	T&B CX70TN TERMINAL	1.000 EA
51XF2520A08	SCREW, HEX SER SLT HD, ZN 1/4-20 X .50 L	1.000 EA
44EP1203A03	FREP, MACH 312 BRG W/SCRN	1.000 EA
HA1201	RODENT SCREEN FOR 44 OPSB & 44EP1203	1.000 EA
51XW1032A06	10-32 X .38, TAPTITE II, HEX WSHR SLTD S	4.000 EA
HW5100A15	W4997-050 WVY WSHR (WB)	1.000 EA
10XN3816K48	3/8-16 X 3 HEX HD CAP SCREW,Z/P	4.000 EA
HW1001A38	LOCKWASHER 3/8, ZINC PLT .688 OD, .382 I	4.000 EA
44EP1403A05	E.P. MACH, 364-5TC FOR 313 BRG W/SCREEN	1.000 EA
HA1201	RODENT SCREEN FOR 44 OPSB & 44EP1203	1.000 EA
51XW1032A06	10-32 X .38, TAPTITE II, HEX WSHR SLTD S	4.000 EA
XY5013A12	NUT,1/2-13,HEX,STEEL,ZINCPLATED	8.000 EA
10CB3500SP	CONDUIT BOX LID, CAST	1.000 EA
51XW2520A12	SCREW, HEX SER SLT HD, ZN, 1/4-20 X .75	4.000 EA

BALDOR
A MEMBER OF THE ABB GROUP

Parts List (continued)

Part Number	Description	Quantity
HW2501G18	SQUARE STEEL KEY .375 X 2.00 LONG	1.000 EA
LB1115N	LABEL,LIFTING DEVICE (ON ROLLS)	1.000 EA
44AD2001A02	BAFFLE 44 OPEN,"X"=1.50, SLOTTED BAND MT	1.000 EA
HA4051A00	PLASTIC CAP FOR GREASE FITTING	1.000 EA
HW4500A03	GREASE FITTING, .125 NPT 1610(ALEMITE) 8	1.000 EA
HW4500A20	1/8NPT SL PIPE PLUG	1.000 EA
MJ1000A02	GREASE, POLYREX EM EXXON (USe 4824-15A)	0.030 LB
44AD2001A02	BAFFLE 44 OPEN,"X"=1.50, SLOTTED BAND MT	1.000 EA
HA4051A00	PLASTIC CAP FOR GREASE FITTING	1.000 EA
HW4500A03	GREASE FITTING, .125 NPT 1610(ALEMITE) 8	1.000 EA
HW4500A20	1/8NPT SL PIPE PLUG	1.000 EA
MG1000Y03	MUNSELL 2.53Y 6.70/ 4.60, GLOSS 20,	0.080 GA
85XU0407S04	4X1/4 U DRIVE PIN STAINLESS	2.000 EA
HA3175A02	THRUBOLT STUD 1/2-13 X 24.500 - GRADE 2	4.000 EA
LB1119N	WARNING LABEL	1.000 EA
LC0181	CONNECTION LABEL	1.000 EA
NP2138L	ALUM SUPER-E UL CSA-EEV PREM CC (300	1.000 EA
44PA1000	PK GP COMB PRINT 39-3/8X31X23-7/8	1.000 EA
MN416A01	TAG-INSTAL-MAINT no wire (1000/bx) 11/14	1.000 EA

BALDOR
A MEMBER OF THE ABB GROUP

AC Induction Motor Performance Data

Record # 31660 - Typical performance - not guaranteed values

Winding: 44WGW013-R002	**Type:** 4462M	**Enclosure:** OPEN

Nameplate Data				460 V, 60 Hz: High Voltage Connection	
Rated Output (HP)	75			Full Load Torque	222 LB-FT
Volts	230/460			Start Configuration	direct on line
Full Load Amps	170/85			Breakdown Torque	610 LB-FT
R.P.M.	1775			Pull-up Torque	235 LB-FT
Hz	60	Phase	3	Locked-rotor Torque	327 LB-FT
NEMA Design Code	B	KVA Code	F	Starting Current	507 A
Service Factor (S.F.)	1.15			No-load Current	26.2 A
NEMA Nom. Eff.	95	Power Factor	85	Line-line Res. @ 25ºC	0.0799 Ω
Rating - Duty	40C AMB-CONT			Temp. Rise @ Rated Load	30°C
S.F. Amps				Temp. Rise @ S.F. Load	37°C
				Locked-rotor Power Factor	26.3
				Rotor inertia	11.7 LB-FT2

Load Characteristics 460 V, 60 Hz, 75 HP

% of Rated Load	25	50	75	100	125	150	S.F.
Power Factor	56	77	84	86	87	87	86
Efficiency	93.6	95.6	95.4	95.3	94.6	93.9	94.7
Speed	1794	1788	1782	1776	1769	1761	1776
Line amperes	33.9	48	66.1	85.4	106	128	100

BALDOR A MEMBER OF THE ABB GROUP

Performance Graph at 460V, 60Hz, 75.0HP Typical performance - Not guaranteed values

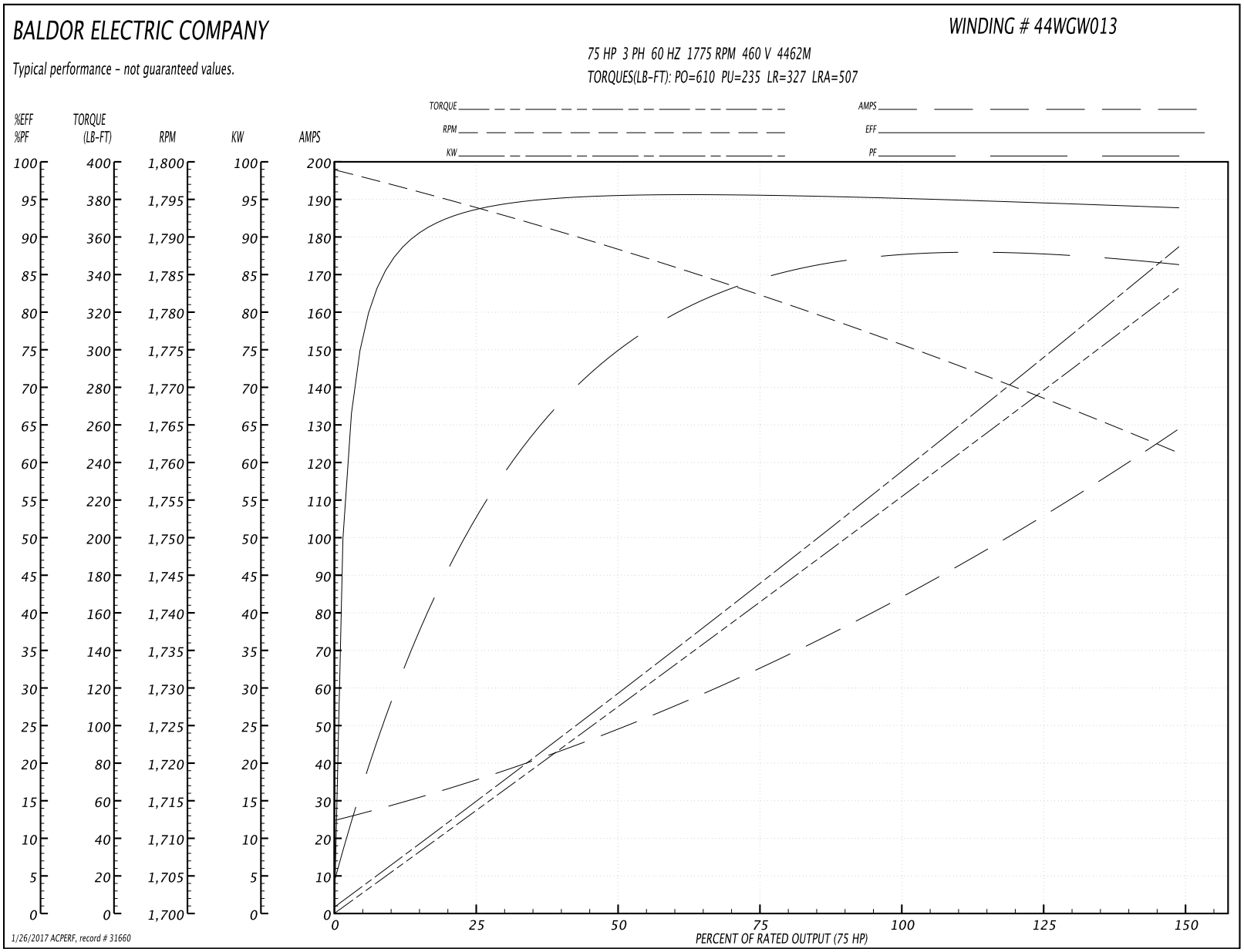

BALDOR A MEMBER OF THE ABB GROUP

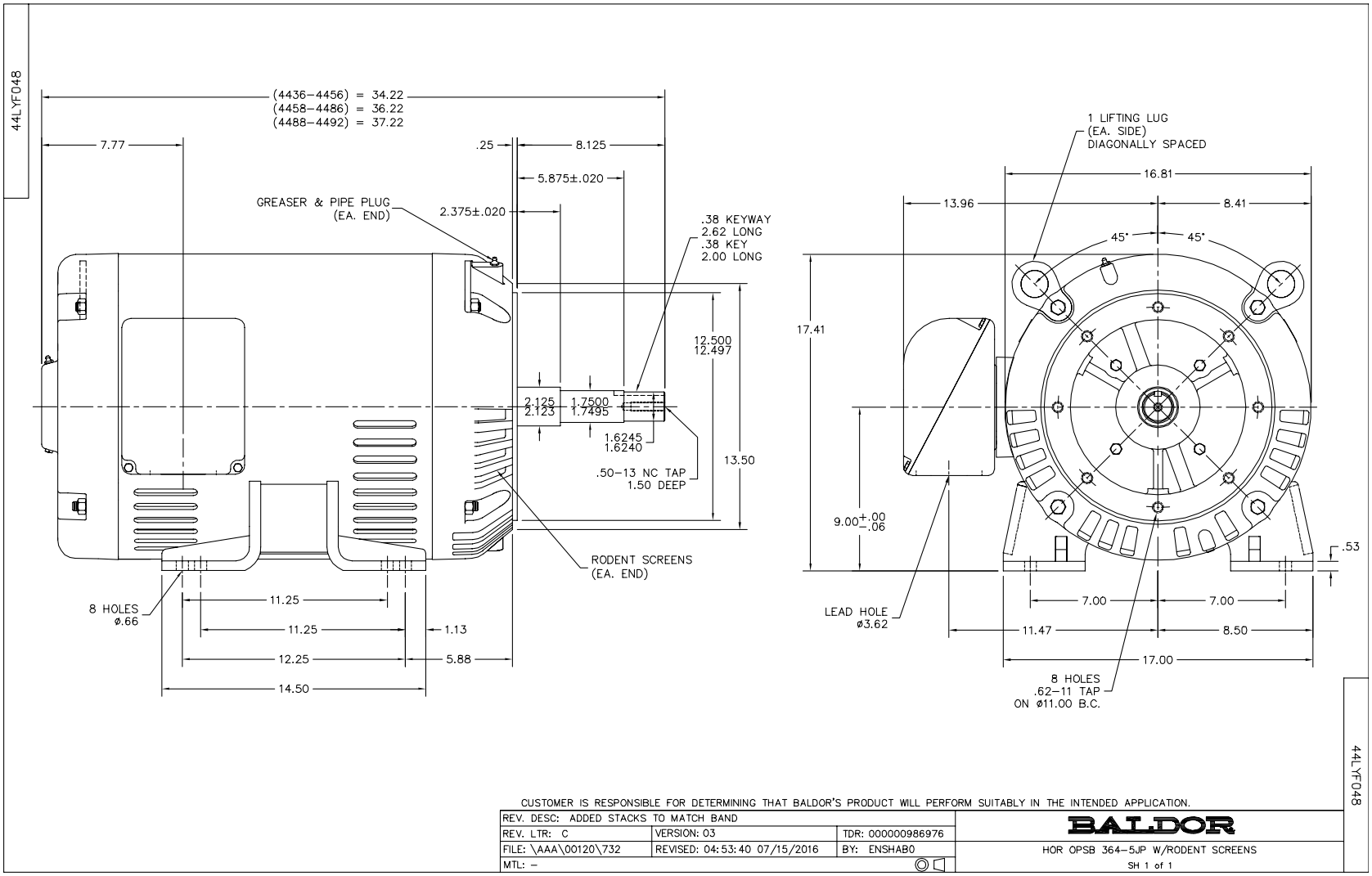

CUSTOMER IS RESPONSIBLE FOR DETERMINING THAT BALDOR'S PRODUCT WILL PERFORM SUITABLY IN THE INTENDED APPLICATION.

REV. DESC: ADDED STACKS TO MATCH BAND			BALDOR
REV. LTR: C	VERSION: 03	TDR: 000000986976	
FILE: \AAA\00120\732	REVISED: 04:53:40 07/15/2016	BY: ENSHAB0	HOR OPSB 364–5JP W/RODENT SCREENS
MTL: –			SH 1 of 1

BALDOR
A MEMBER OF THE ABB GROUP

CD0180

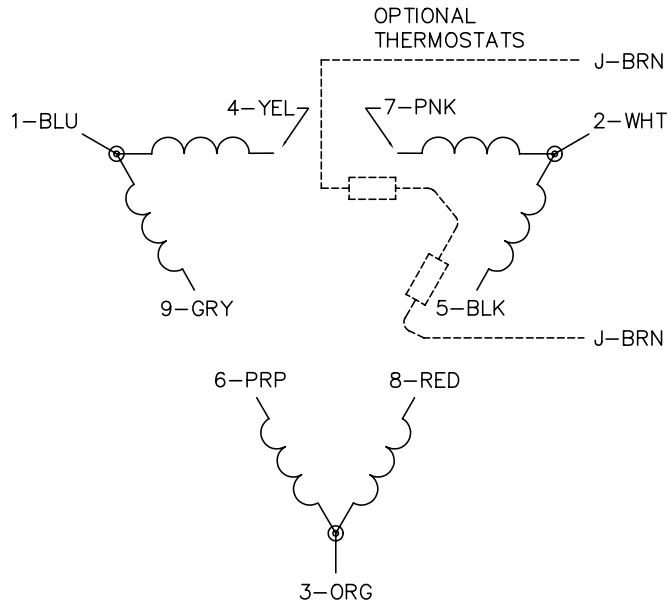

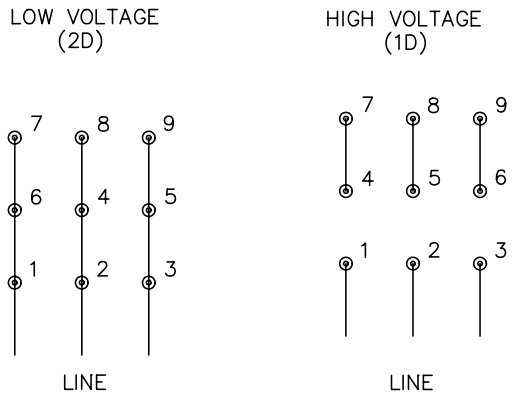

NOTES:

1. INTERCHANGE ANY TWO LINE LEADS TO REVERSE ROTATION.
2. OPTIONAL THERMOSTATS ARE PROVIDED WHEN SPECIFIED.
3. ACTUAL NUMBER OF INTERNAL PARALLEL CIRCUITS MAY BE A MULTIPLE OF THOSE SHOWN ABOVE.
4. LEAD COLORS ARE OPTIONAL. LEADS MUST ALWAYS BE NUMBERED AS SHOWN.

CD0180

REV. DESC: REVISE TO SHOW OPTIONAL COLORS			
REV. LTR: C	BY: JLP	REVISED: 01/21/99 2:28	TDR: 0171435
CD0180		FILE: AAA00005148	MDL: –
		MTL: –	

BALDOR ELECTRIC Co.

3PH, DV, 9 LEADS, DELTA CONNECTION

BALDOR
A MEMBER OF THE ABB GROUP